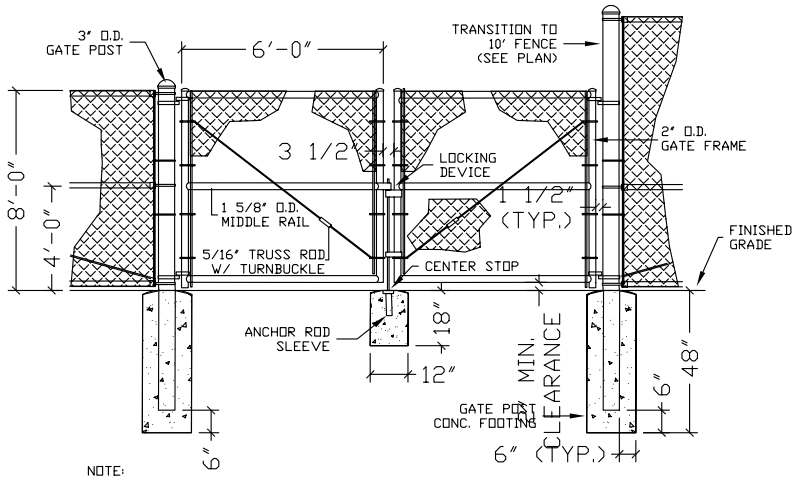

NOTE:
1. KNUCKLE TOP & BOTTOM OF CHAIN LINK FABRIC.
2. FABRIC SHALL BE FLUSH W/ TOP RAIL OF GATE.

A — 12' x 8' GATE

ACD2 ACD1

NOT TO SCALE

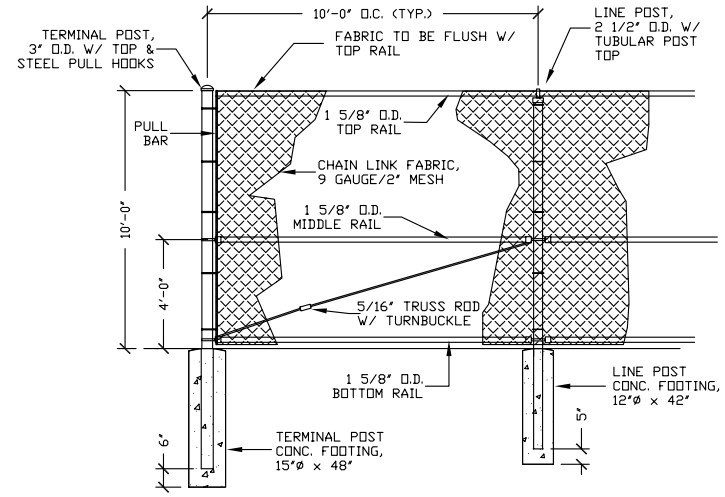

NOTE:
1. KNUCKLE CHAIN LINK FABRIC TOP & BOTTOM.
2. TRUSS RODS ARE TO BE USED IN CONJUCTION W/ TERMINAL, GATE, & CORNER POSTS; POINTS OF DEFLECTION GREATER THAN 30° & EVERY 200'.
3. BOTTOM RAIL: MAX. 1" ABOVE GRADE ON PAVED SURFACES; MAX. 2" ABOVE GRADE ON UNPAVED SURFACES.

D — 10' FENCE

ACD2 ACD1

NOT TO SCALE

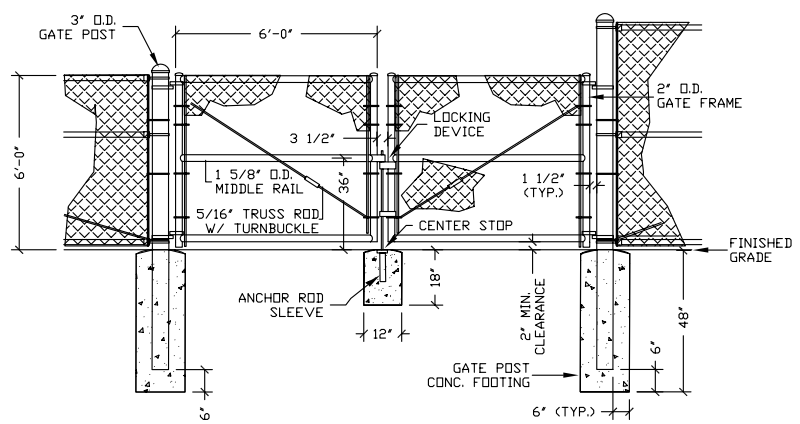

NOTE:
1. KNUCKLE TOP & BOTTOM OF CHAIN LINK FABRIC.
2. FABRIC SHALL BE FLUSH W/ TOP RAIL OF GATE.
3. FURNISH GATE HOLDBACKS. ANCHOR IN CONCRETE FOOTING PER ANCHOR ROD SLEEVE.
4. GATES SWING OUT AWAY FROM FIELD.

B — 12' x 6' GATE

ACD2 ACD1

NOT TO SCALE

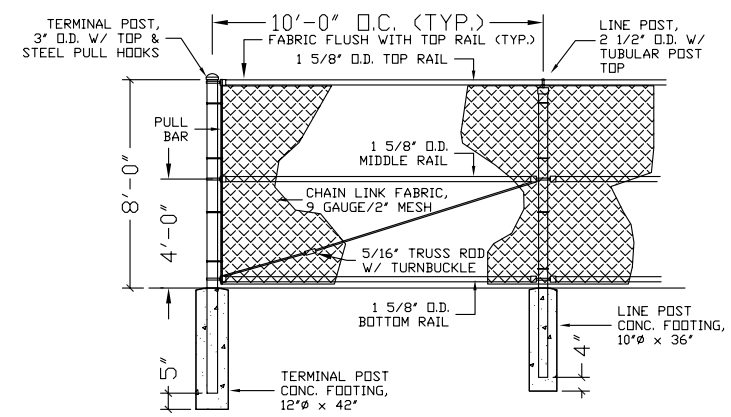

NOTE:
1. KNUCKLE CHAIN LINK FABRIC TOP & BOTTOM.
2. TRUSS RODS & MIDDLE RAILS ARE TO BE USED IN CONJUCTION W/ TERMINAL, GATE, & CORNER POSTS; POINTS OF DEFLECTION GREATER THAN 30° & EVERY 200'.
3. MIDDLE RAIL SHALL BE USED WITH DUGOUT FENCING AND AS NOTED ON PLAN.
4. BOTTOM RAIL: MAX. 1" ABOVE GRADE ON PAVED SURFACES; MAX. 2" ABOVE GRADE ON UNPAVED SURFACES.

E — 8' FENCE

ACD2 ACD1

NOT TO SCALE

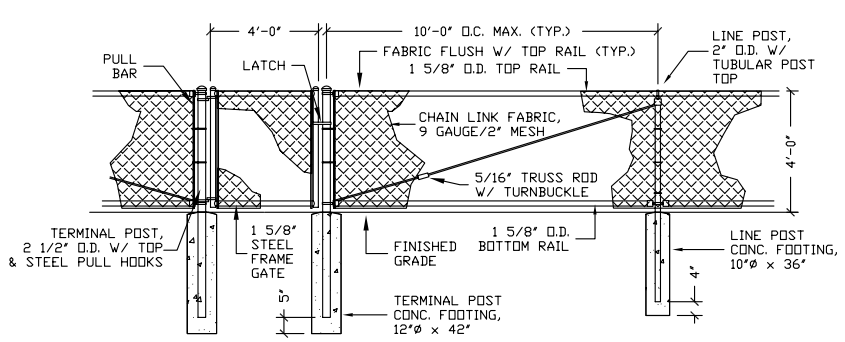

NOTE:
1. KNUCKLE CHAIN LINK FABRIC TOP & BOTTOM.
2. TRUSS RODS & MIDDLE RAILS ARE TO BE USED IN CONJUCTION W/ TERMINAL, GATE, & CORNER POSTS; POINTS OF DEFLECTION GREATER THAN 30° & EVERY 200'.
3. BOTTOM RAIL: MAX. 1" ABOVE GRADE ON PAVED SURFACES; MAX. 2" ABOVE GRADE ON UNPAVED SURFACES.

C — 4' FENCE & GATE

ACD2 ACD1

NOT TO SCALE

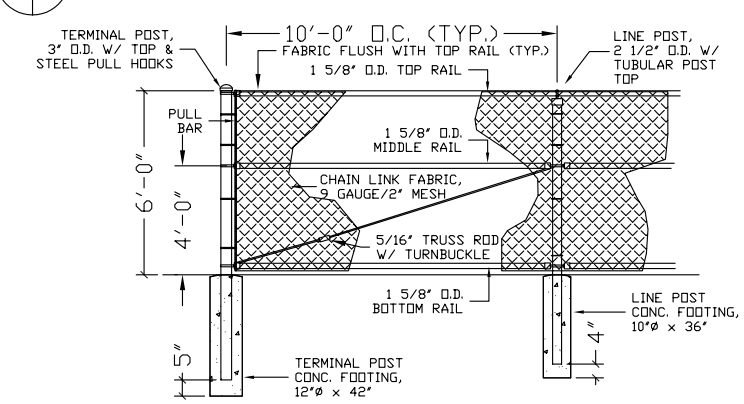

NOTE:
1. KNUCKLE CHAIN LINK FABRIC TOP & BOTTOM.
2. TRUSS RODS & MIDDLE RAILS ARE TO BE USED IN CONJUCTION W/ TERMINAL, GATE, & CORNER POSTS; POINTS OF DEFLECTION GREATER THAN 30° & EVERY 200'.
3. MIDDLE RAIL SHALL BE USED WITH DUGOUT FENCING AND AS NOTED ON PLAN.
4. BOTTOM RAIL: MAX. 1" ABOVE GRADE ON PAVED SURFACES; MAX. 2" ABOVE GRADE ON UNPAVED SURFACES.

F — 6' FENCE

ACD2 ACD1

NOT TO SCALE

COMMONWEALTH OF VIRGINIA
PAUL R. MORETH
No. 00109
CERTIFIED LANDSCAPE ARCHITECT

RPI
LANDSCAPE ARCHITECTURE · ENGINEERING
ARCHITECTURE · RECREATION DESIGN
RESOURCE PLANNERS, INC
FAX: (804) 364-3464
PHONE: (804) 355-6957
311 NORTHSIDE AVENUE, RICHMOND, VA 23228

CONTSTRUCTION DETAILS

CENTRAL AREA PARK
FAUQUIER COUNTY PARKS AND RECREATION
FAUQUIER COUNTY, VIRGINIA

10595ACD_det_2-0

REVISIONS:
12/15/03
3/5/04
5/4/04

DRAWN BY: DFS
CHECKED BY: PRM
APPROVED BY: PRM

DATE: 1/21/02
SCALE: 1"=NA

PROJECT NO.: 10595ACD

SHEET
ACD2 OF 5