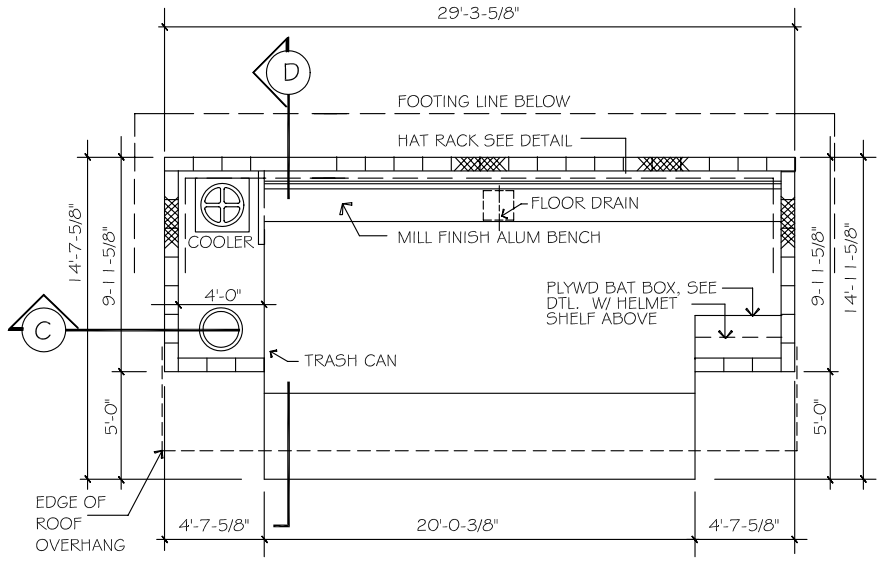

FIRST BASE DUGOUT PLAN

SCALE : 1/4" = 1'-0"

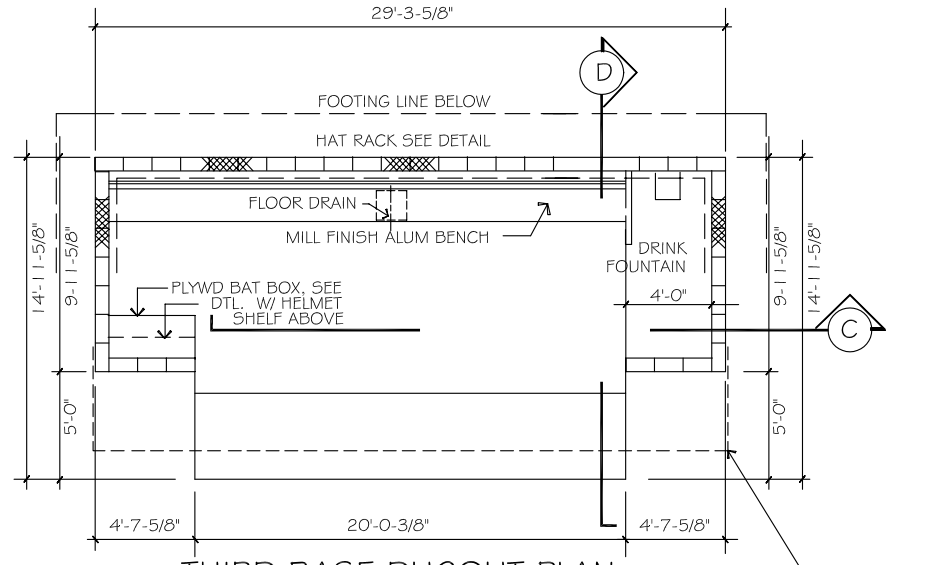

THIRD BASE DUGOUT PLAN

SCALE : 1/4" = 1'-0"

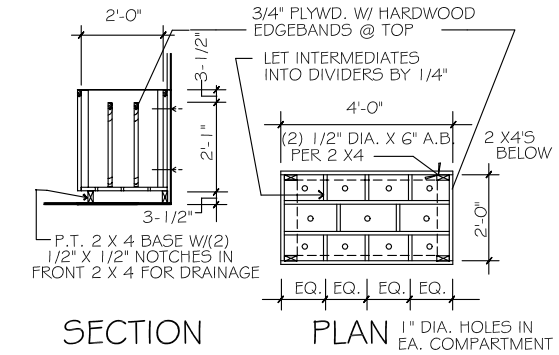

SECTION PLAN
BAT STORAGE BOX

SCALE : 1/2" = 1'-0"

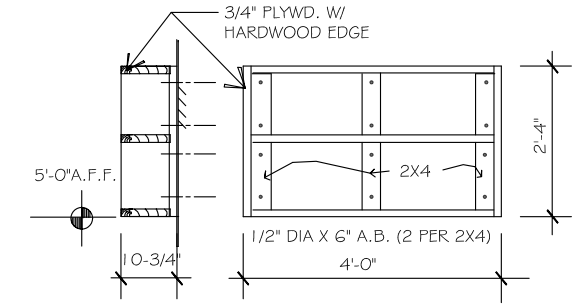

HELMET SHELF

SCALE : 3/4" = 1'-0"

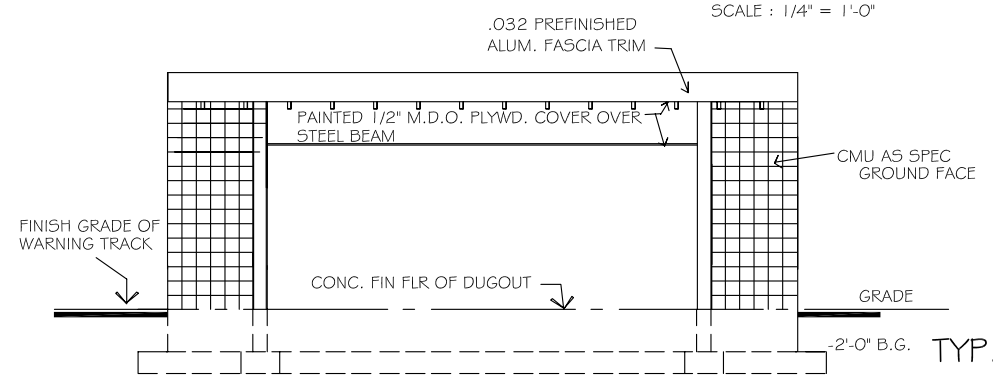

FRONT ELEVATION

SCALE : 1/4" = 1'-0"

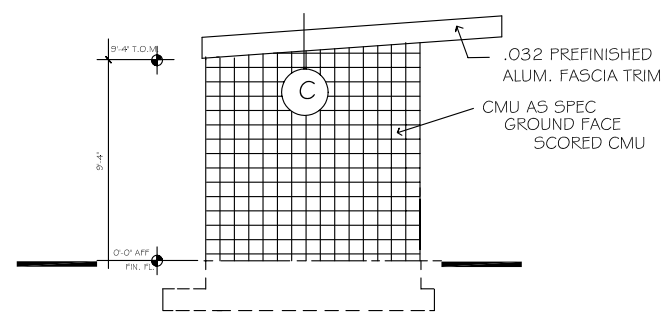

TYP.SIDE ELEVATION

SCALE : 1/4" = 1'-0"

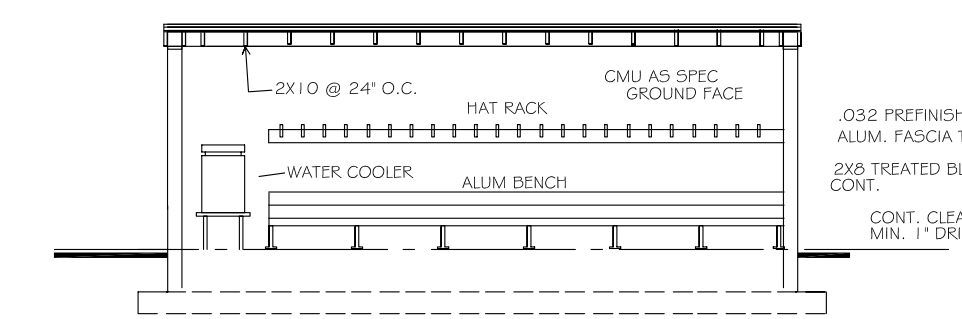

INTERIOR ELEVATION

SCALE : 1/4" = 1'-0"

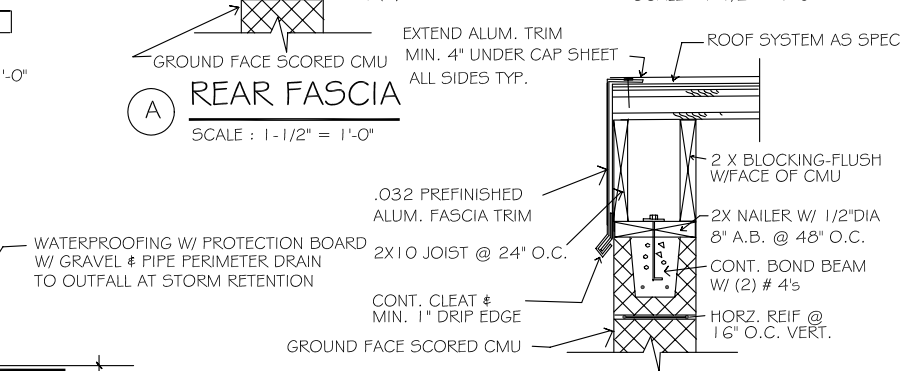

B FRONT FASCIA

SCALE : 1-1/2" = 1'-0"

A REAR FASCIA

SCALE : 1-1/2" = 1'-0"

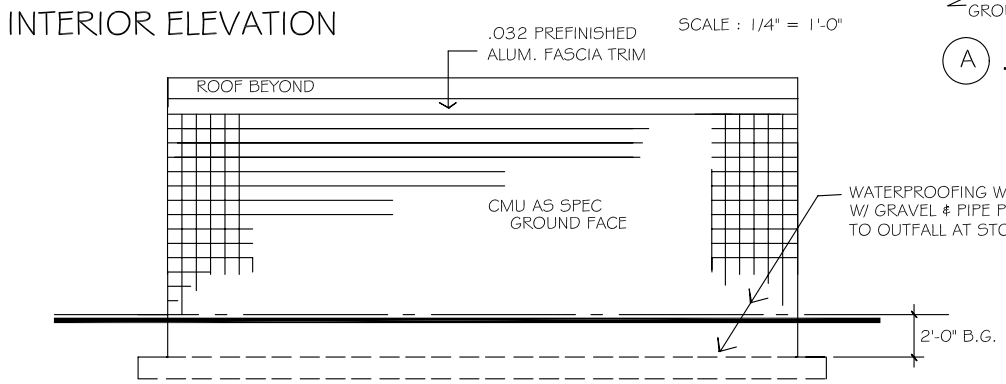

REAR ELEVATION

SCALE : 1/4" = 1'-0"

C ROOF RAKE

SCALE : 1-1/2" = 1'-0"

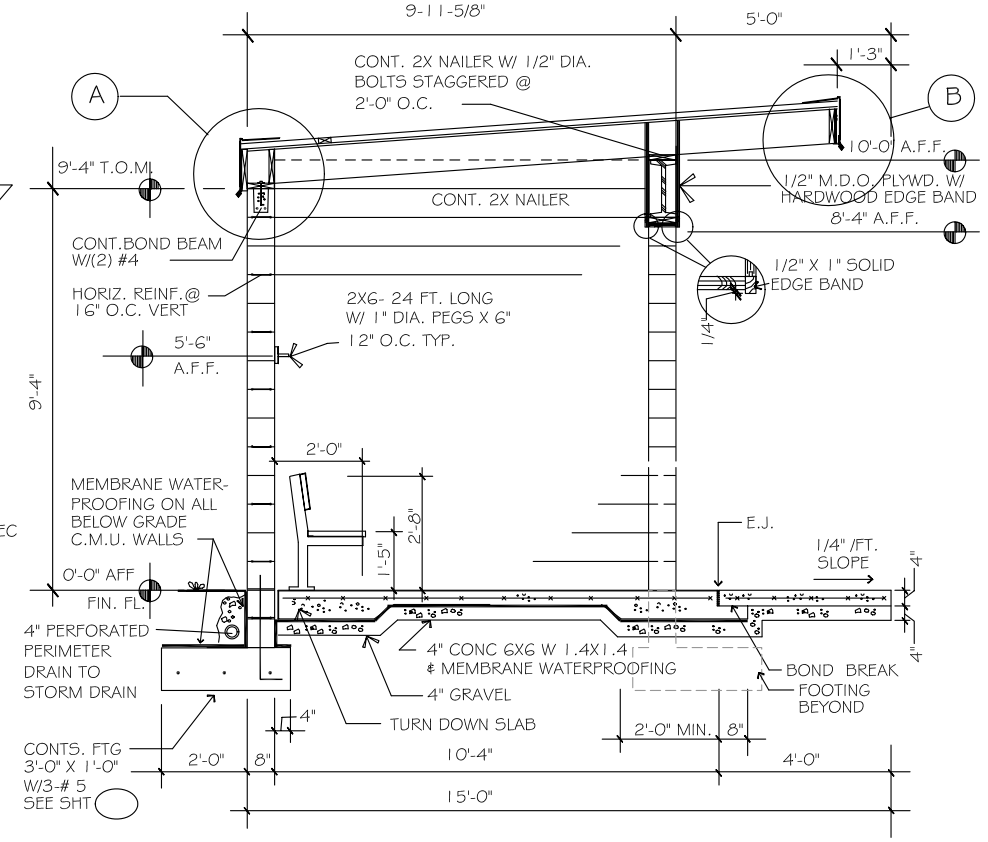

D BUILDING SECTION

SCALE : 1/2" = 1'-0"

RPI
LANDSCAPE ARCHITECTURE · ENGINEERING
ARCHITECTURE · RECREATION DESIGN
RESOURCE PLANNERS, INC
311 NORTHSIDE AVENUE, RICHMOND, VA 23228
PHONE: (804) 264-3464
FAX: (804) 261-6967

CONTSTRUCTION DETAILS

CENTRAL AREA PARK
FAUQUIER COUNTY PARKS AND RECREATION
FAUQUIER COUNTY, VIRGINIA

10595ACD_det_2-0

REVISIONS:
12/15/03
3/5/04
5/4/04

DRAWN BY: DFS
CHECKED BY: PRM
APPROVED BY: PRM
DATE: 1/21/02
SCALE: 1"=NA
PROJECT NO.: 10595ACD

SHEET
ACD4 OF 5