Fauquier County, Virginia

Typical Deck Details

Based on the 2012 Virginia Residential Code

The design details in this document apply to residential, single-level decks only. Construction cannot deviate from the details herein unless prior approval is obtained by the county. A copy of this document must be on the job site and available during each required inspection.

Fauquier County, Virginia

Typical Deck Details

CONTENTS

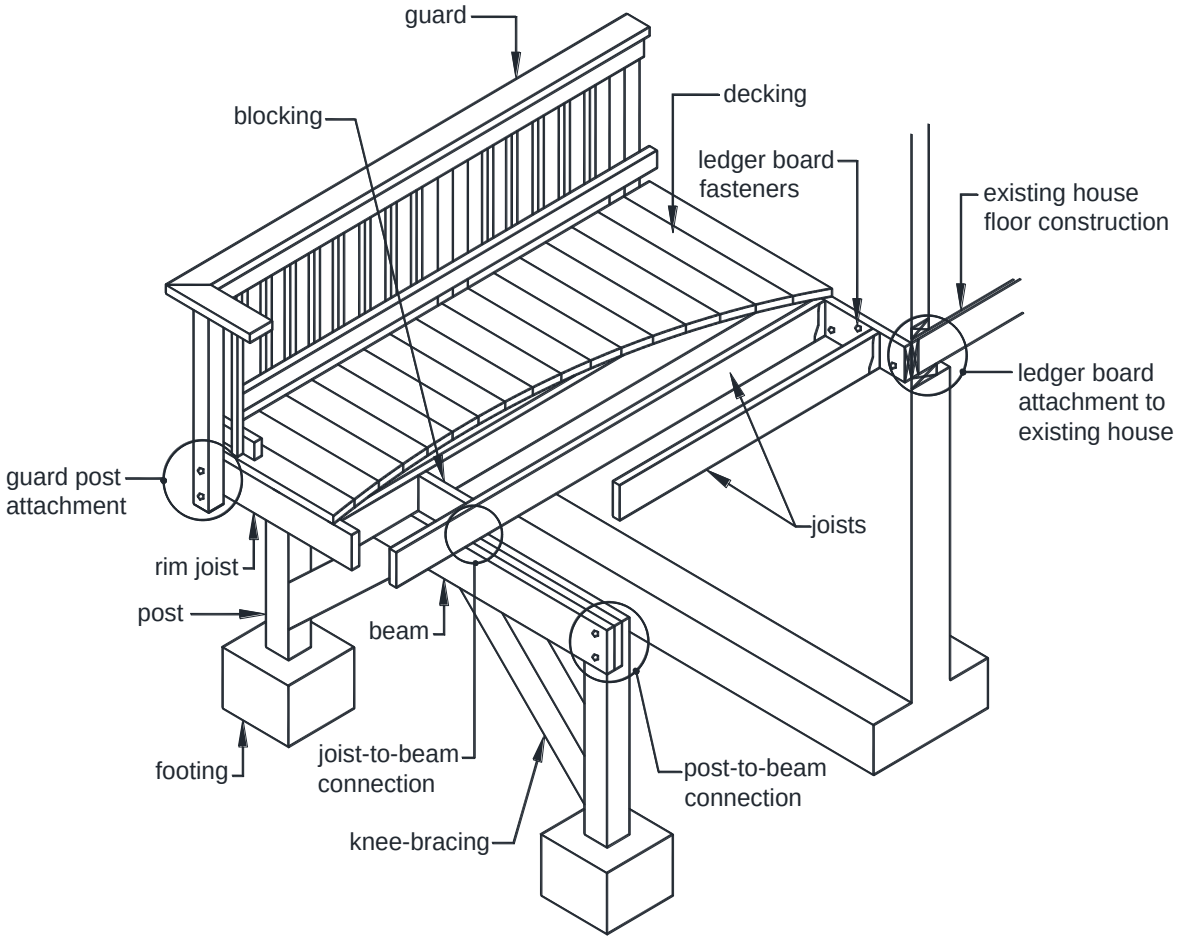

Section 1 ▪ General Notes 3
- Design Considerations 3
- Material Specifications 3

Section 2 ▪ Deck Surface 4
- Decking 4
- Safety Glazing 4
- Electrical 5

Section 3 ▪ Joists 6
- Joist Size 6
- Joist Framing at Projections 8
- Joist Hangers 8
- Joist-to-Beam Connection 8

Section 4 ▪ Beams 9
- Beam Size 10
- Beam Assembly 10

Section 5 ▪ Footings & Posts 11
- Footing Size 11
- Post-to-Footing Connection 12
- Post Size & Maximum Height 11
- Beam-to-Post Connection 12

Section 6 ▪ Ledger Attachment 13
- General Requirements 13
- Ledger Board Fasteners 15

Section 7 ▪ Lateral Support 17
- Bracing Methods 17
- Bracing-to-Framing Connection 19

Section 8 ▪ Guards 19
- Guard Construction 19
- Guard Post Connections 20

Section 9 ▪ Stairs 21
- Stair Geometry 21
- Stair Landing 21
- Stair Construction 21

Fauquier County Deck Cover Sheet 25

1 ▪ General Notes

These typical deck details are provided to aid you to design and construct your deck and be code compliant. Prior to designing your deck, read this publication thoroughly and pay close attention to each applicable detail. Once you have selected the size of your deck, use the joist and beam span tables to determine their size, spacing, span lengths and overhang dimensions. Use the remaining details to guide you in determining the other design elements of your deck. Complete the **Fauquier County Deck Cover Sheet** found on **page 25.**

DESIGN CONSIDERATIONS

1. These details are based on the prescriptive requirements of the 2012 Virginia Residential Code, industry best-practices and applicable referenced standards such as the National Design Specification for Wood Construction.
2. Framing members in these details are designed for a 40 PSF live load, 10 PSF dead load, normal loading duration, wet service conditions and deflections of $\ell/360$ for main spans and $\ell/180$ for overhangs with a 220-pound point load.
3. The use of these details to design and construct multi-level decks is prohibited.
4. Deviation from these details require approval by county staff prior to construction.
5. Decks constructed in accordance with these details are not approved for privacy screens, planters, built-in seating or hot tubs.
6. Decks must be designed to ensure rain and melting ice and snow flow away from the existing house.
7. Publication "DCA6" from the American Wood Council can also be used to obtain a permit in Fairfax County. Go to *awc.org* to download.

MATERIAL SPECIFICATIONS

1. Lumber shall be preservative-treated, southern pine, grade #2 or better. Lumber not native to North America, such as Ipe, may be used as decking only; its use in guards is prohibited.
2. Lumber in contact with the ground shall be rated as "ground-contact." Not all treated lumber is rated for ground contact.
3. Concrete in footings shall have a minimum compressive strength of 3,000 PSI.
4. Nails shall be threaded, ring-shanked or annular grooved. A ⅛-inch pilot hole shall be used at toe-nailing locations.
5. Carriage-bolts may be substituted where through-bolts are specified.
6. Fasteners shall be hot-dipped galvanized, stainless steel or approved for use with preservative-treated lumber.
7. Hardware and mechanical connectors, e.g., joist hangers or post anchors, shall be stainless steel or galvanized with 1.85 ounces of zinc per square foot (G-185 coating). Look for product lines such as "Zmax," "Triple Zinc" or "Gold Coat."
8. Flashing at ledger board connections (see Page 13) shall be copper (with copper nails only), stainless steel, UV resistant plastic or galvanized steel with a G-185 coating.
9. Plastic composites are materials composed of bound wood and plastic fibers. Permissible as noted in this document, plastic composites must bear a label indicating its compliance with ASTM

D 7032. Plastic composite's label and installation instructions must be available to the inspector.

10. When using plastic composites, exercise caution as some members do not have the same capacity as their wood equivalents.

11. PVC decking and guards are permitted provided they have a valid evaluation report from an accredited listing agency such as the International Code Council – Evaluation Service. Installation shall be in conformance with the report and the manufacturer's instructions which must be available to the inspector.

12. The use of other materials and products, other than those permitted herein, shall be approved by the county prior to installation.

2 ▪ Deck Surface

DECKING

- Decking shall be per TABLE 1 and placed perpendicularly or at an angle up to 45 degrees to the joists.
- Wood decking shall be attached per FIGURE 1. If installed wet, place decking with no gap so after drying a ⅛-inch gap is created.
- Each decking member shall bear on a minimum of three joists or blocking between joists.
- Placement and attachment of plastic composites shall be per manufacturer's instructions.

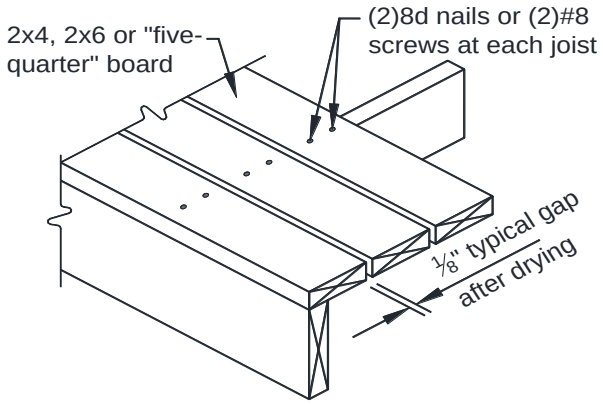

FIGURE 1: TYPICAL DECKING

TABLE 1: DECKING REQUIREMENTS AND MAXIMUM JOIST SPACING

Material Type and Nominal Size	Maximum Joist Spacing (inches)	
	Angular	Perpendicular
Wood "five-quarter" board	16	16
Wood 2x4 or 2x6	16	24
Plastic composites, PVC	per manufacturer	per manufacturer

SAFETY GLAZING

To reduce injury due to an accidental impact, safety glazing in window glass is required when the existing house wall encloses any portion of the deck surface or acts as a barrier to stairs, landings and areas at the top and bottom of the stairs.

Windows adjacent a deck surface. As shown in FIGURE 2, single panes of glass meeting all the requirements listed below must be safety-glazed.

- Glass area is greater than 9 square feet,

- The bottom edge of the pane is less than 18 inches above the walking surface of the deck, and
- The top edge of the pane is greater than 36 inches above the walking surface of the deck.

In the absence of safety glazing, a horizontal rail across the window must be installed. The rail must meet the requirements of a stair handrail per Page 23.

Windows adjacent stairways and landings. Single panes, partially or wholly located in the hatched area shown in FIGURE 2, must be safety-glazed. In the absence of safety glazing, a stair guard per Page 22 or handrail per Page 23, must be constructed to separate the window from the stairway.

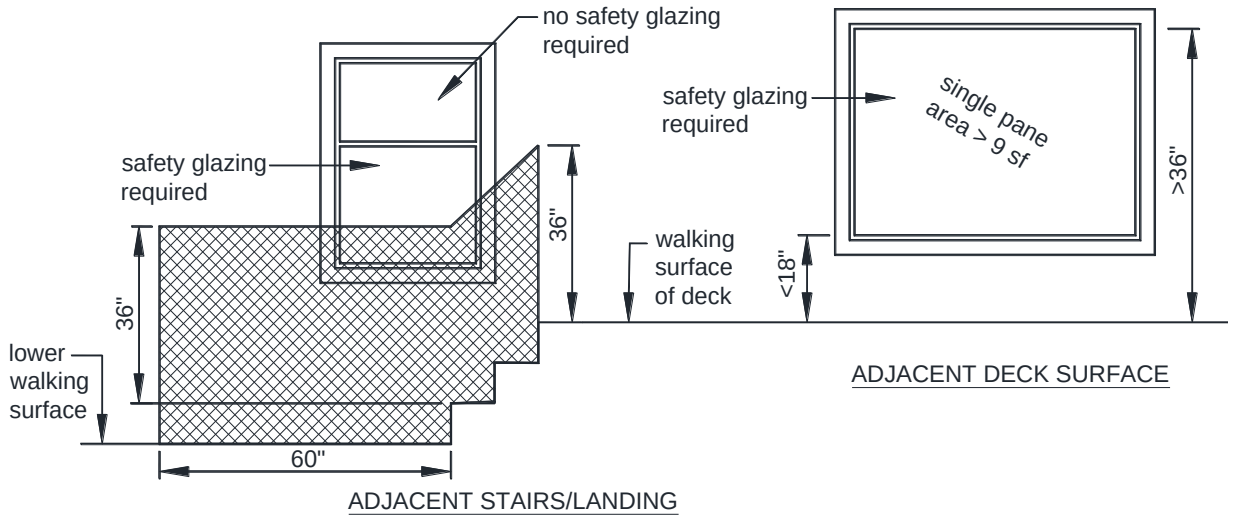

FIGURE 2: SAFETY GLAZING REQUIREMENTS

ELECTRICAL

Outlets. Decks shall have a minimum of one electrical outlet along the perimeter of the deck and within 6.5 feet of the floor.

Stair lighting. Each stairway section shall have a light source that illuminates all stairs and landings. Lights shall be operated from interior switches, motion detectors or timed switches. Low voltage lighting at each stair tread is permissible.

3 ▪ Joists

- Joists are repetitively placed framing members spaced at 12, 16 or 24 inches on center which are supported at each end by a beam or ledger board.
- Single span decks are framed with joists that have one span between supports (not including overhang) as shown in FIGURES 3 and 4. Multi-span decks have joists with more than one span which bear on multiple beam as shown in FIGURES 5 and 6.
- At the house connection, joists bear on the attached ledger board. Joists on a free-standing deck do not connect to the house; instead bearing is provided by an additional beam located at or near the house wall as shown in FIGURE 7.

JOIST SIZE

- Joist span length is measured from the ledger board to the centerline of the supporting beam or between the centerlines of the supporting beams at each end.
- Joists are permitted to overhang past a dropped beam; joist span length does not include overhangs.
- The joists' design is based on spacing, size and span length. Use TABLE 2 to determine joist size and the corresponding maximum allowable overhang. **Note: the overhang dimension shall never exceed one-fourth of the actual joist span.**
- Provide full-depth 2x blocking between overhanging joists above beam locations. Exception: blocking may be omitted if the overhang is less than or equal to 2 feet.
- Where blocking between joists is required, attach blocking using joist hangers at each end or by toe-nailing blocking to joists at each end, top and bottom with 10d nails.
- Attach a continuous rim joist or blocking at the joist ends as shown in FIGURES 3, 5 and 7. Attach a rim joist to the end of each joist with (3)10d nails or (3)#10 by 3-inch wood screws.
- When choosing 2x6 joists, the corresponding ledger board must be a 2x8 minimum. See Page 13 for more information.
- Guards cannot be attached to decks framed with 2x6 joists. See Page 20 for more information.

TABLE 2: MAXIMUM JOIST SPAN LENGTH

Joist Spacing (inches on center)	Joist Size	Allowable Span	Allowable Overhang[1]
12	2x6	9'-11"	1'-3"
	2x8	13'-1"	2'-1"
	2x10	16'-2"	3'-4"
	2x12	18'-0"	4'-6"
16	2x6	9'-0"	1'-4"
	2x8	11'-10"	2'-3"
	2x10	14'-0"	3'-6"
	2x12	16'-6"	4'-2"
24	2x6	7'-7"	1'-6"
	2x8	9'-8"	2'-5"
	2x10	11'-5"	2'-10"
	2x12	13'-6"	3'-4"

[1] Overhang dimension shall not exceed one-fourth of the actual joist span.

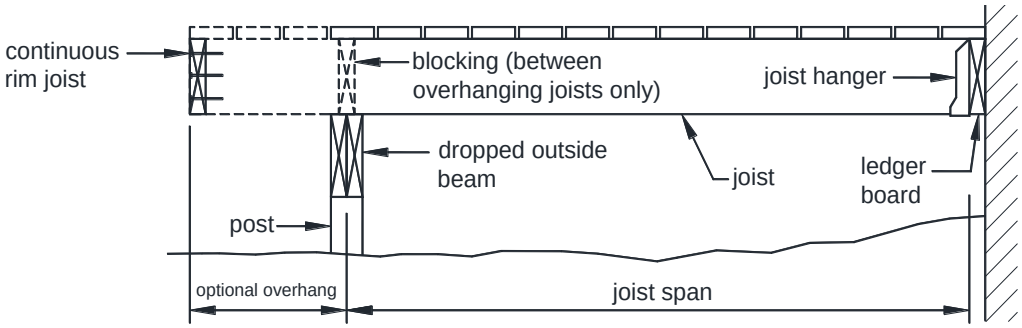

FIGURE 3: SINGLE SPAN DECK - JOISTS ATTACHED AT HOUSE WITH DROPPED BEAM

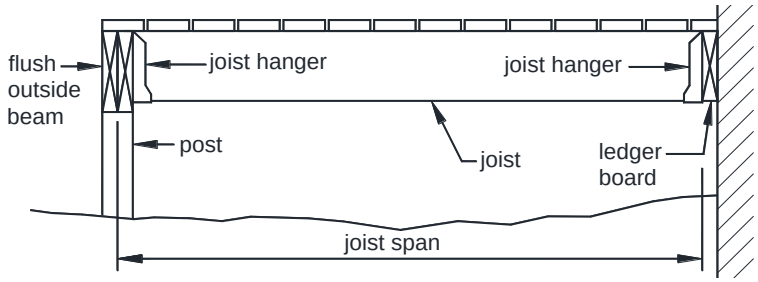

FIGURE 4: SINGLE SPAN DECK - JOISTS ATTACHED AT HOUSE WITH FLUSH BEAM

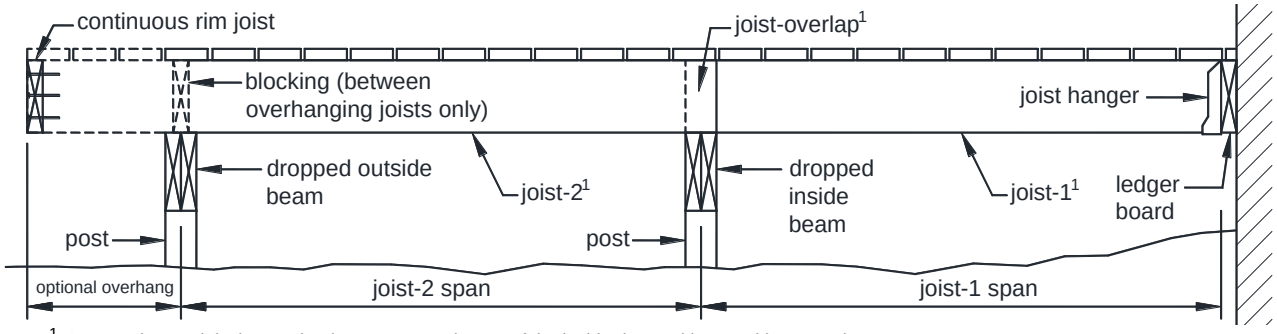

[1] One continuous joist is permitted to span over the top of the inside dropped beam with no overlap.

FIGURE 5: MULTI-SPAN DECK - JOISTS WITH DROPPED BEAMS

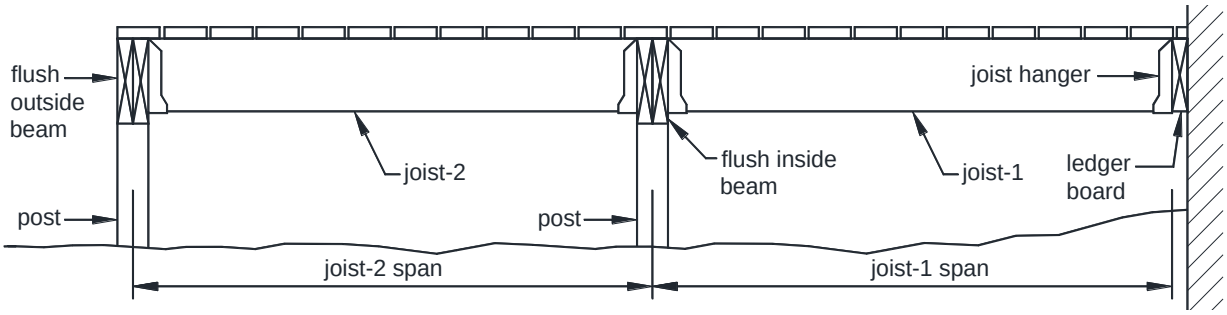

FIGURE 6: MULTI-SPAN DECK - JOISTS WITH FLUSH BEAMS

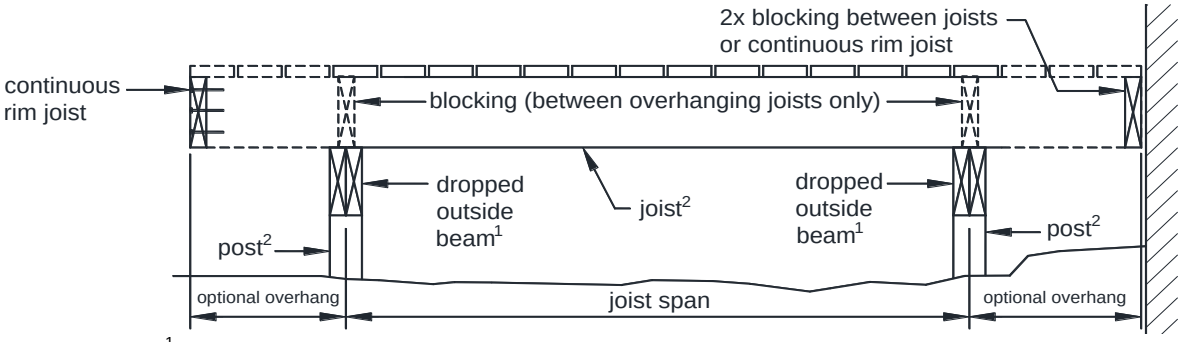

[1] Flush beams are permitted with freestanding decks when joists do not overhang.

[2] Align joists to be located at post locations in order to accommodate lateral bracing per FIGURE 30.

FIGURE 7: JOISTS WITH FREESTANDING DECKS

FRAMING AT PROJECTIONS

Additional framing and ledger board fasteners per Section 6 on Page 15 are required at projections such as chimneys or bay windows as shown in FIGURE 8. Each ply of the header shall be equal to the deck joist size. Joist hangers shall meet the requirements below.

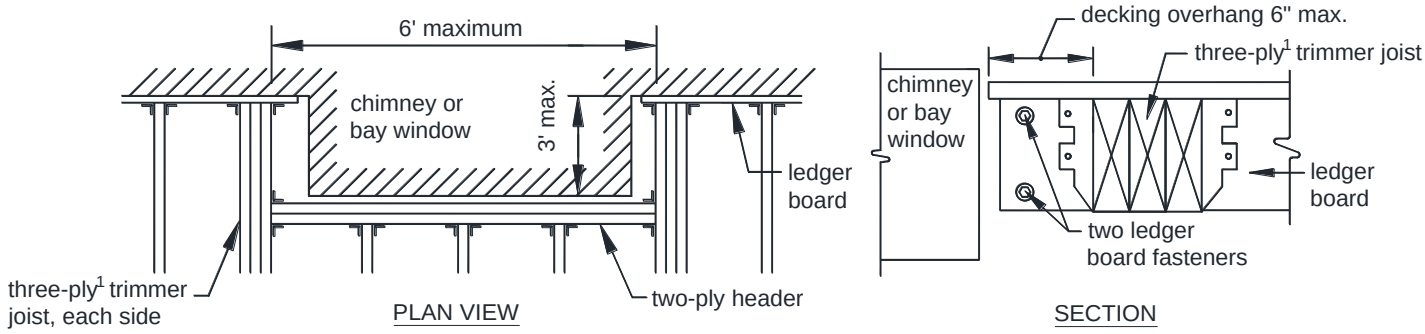

[1] May be reduce to two-ply trimmer joist if joist spacing equals 24 inches on center or joist span is less than or equal to 8.5 feet.

FIGURE 8: FRAMING AT CHIMNEY OR BAY WINDOW

JOIST HANGERS

- Joist hanger depth, **d**, as shown in FIGURE 9, shall be greater than or equal to 60 percent of the joist depth.
- The manufactured width of the joist hanger shall accommodate the number of plies being carried.
- Do not bend hanger flanges to accommodate field conditions.
- Joist hangers shall be fastened to the ledger board or flush beam using its manufacturer's recommended screws. All other fasteners are permitted to be nails.
- Use joist hangers with inside flanges when clearances to the edge of the beam or ledger board dictate.
- Clip angles or brackets used to support framing members in lieu of joist hangers are prohibited.

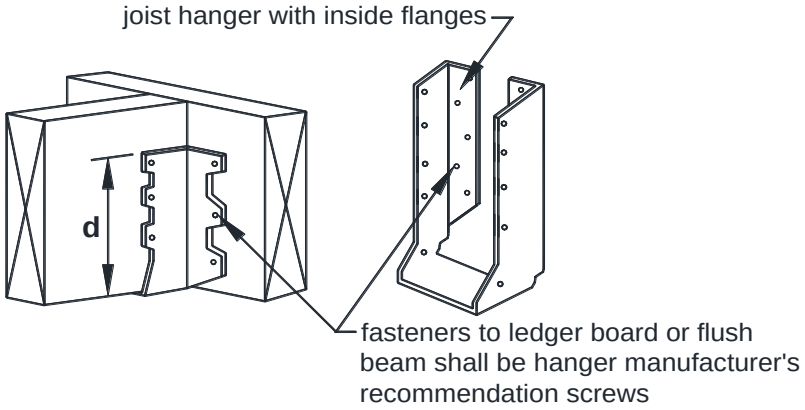

FIGURE 9: JOIST HANGERS

JOIST-TO-BEAM CONNECTION

- Each joist shall be attached to the beam in accordance with FIGURE 10.
- Mechanical connectors or hurricane clips shall have a minimum capacity of 100 pounds in both uplift and lateral directions. Installation shall be per manufacturer's instructions.
- As shown in FIGURE 10, multi-span joists are permitted to span continuously over a dropped interior beam with one mechanical connector or overlap with a mechanical connector at each joist.

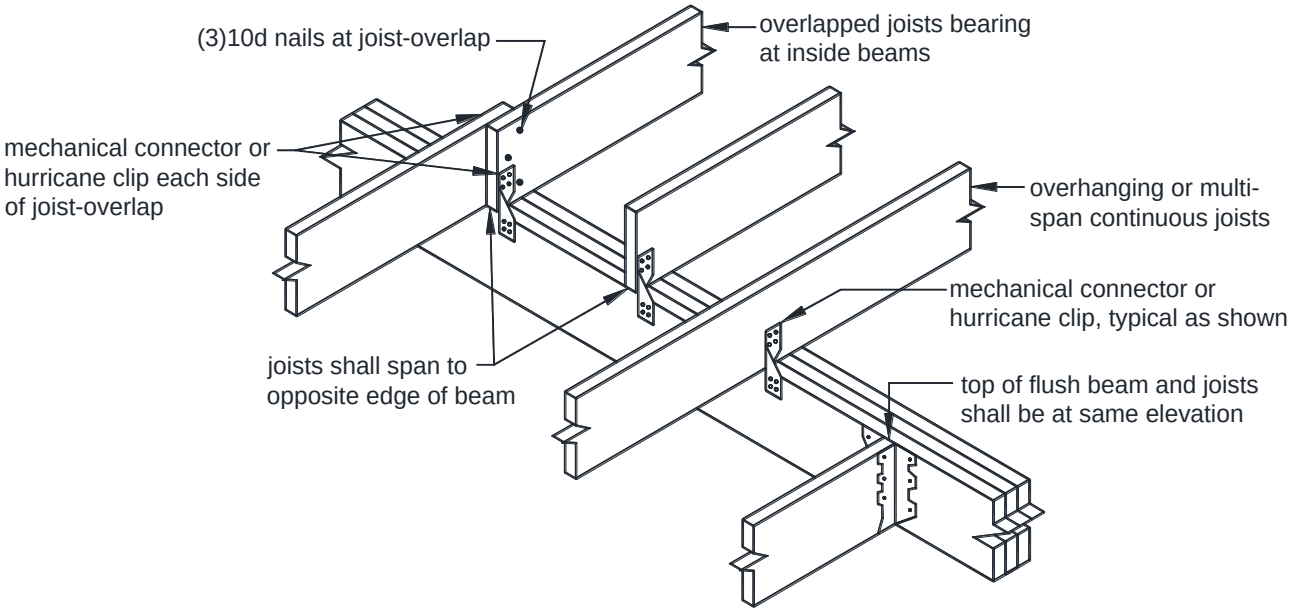

FIGURE 10: JOIST-TO-BEAM CONNECTION

4 ▪ Beams

- Beams are assembled, multi-ply framing members which span between supporting posts. Multi-span decks have more than one beam; spacing between beams is dependent on the allowable span lengths of the supported joists.
- Inside beams have joists bearing from each side. Outside beams have joists, with or without an overhang, bearing from one side.
- Dropped beams have joists bearing above; flush beams have joists with hangers bearing on its sides; see FIGURES 3 through 7 and FIGURE 11.
- Multi-span decks are permitted to mix flush and dropped beams.

BEAM SIZE

- Beam size is based on its influence width and longest span length per TABLE 3. Beam influence width, as shown in FIGURE 12, is based on supported joists' span lengths and overhang dimensions.
- Beam span length, as shown in FIGURE 11, is measured between the centerlines of two adjacent posts and does not include the beam overhangs.
- Beams may overhang past the center of the post up to one-fourth of the <u>actual</u> beam span.
- Flush beams shall have a depth greater than or equal to the deepest joist.

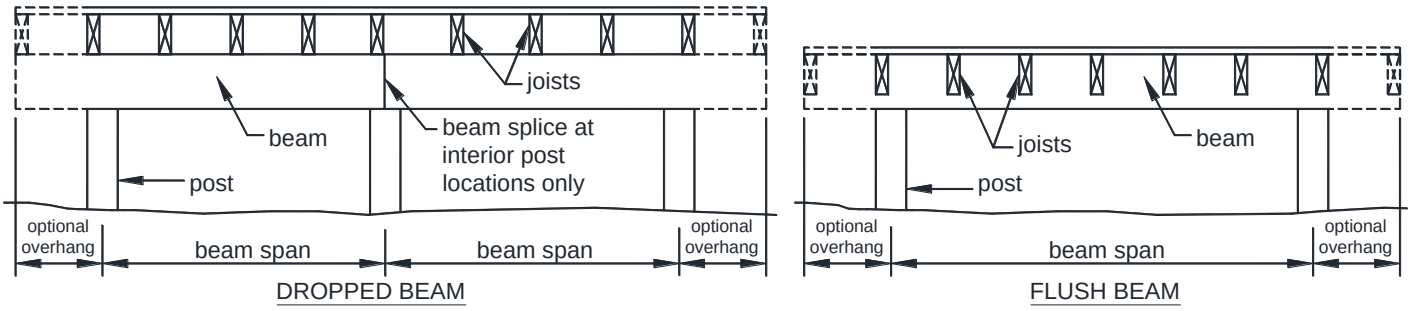

FIGURE 11: BEAM TYPES

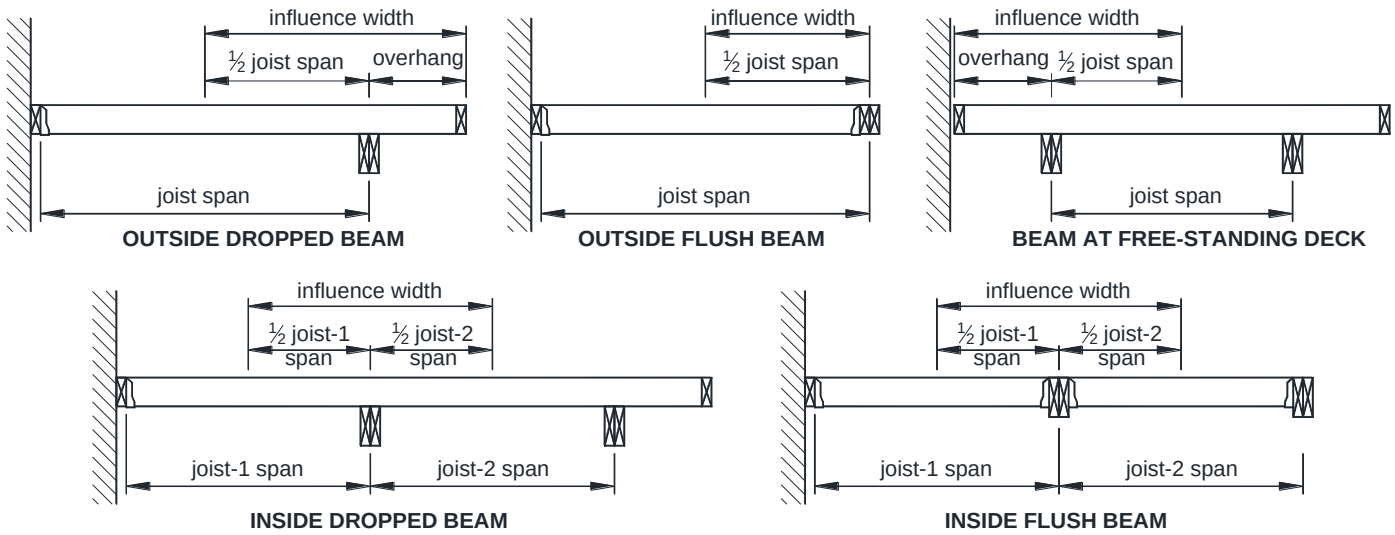

FIGURE 12: BEAM INFLUENCE WIDTH

TABLE 3: MINIMUM BEAM SIZE [1]

Beam Influence Width (ft) less than or equal to:	Longest Beam Span Length (feet), less than or equal to:						
	6	**8**	**10**	**12**	**14**	**16**	**18**
2	(2)2x6	(2)2x6	(2)2x8, (3)2x6	(2)2x8	(2)2x10, (3)2x8	(2)2x12	(3)2x10
3	(2)2x6	(2)2x6	(2)2x8	(2)2x10, (3)2x8	(2)2x12, (3)2x10	(3)2x10	(3)2x12
4	(2)2x6	(2)2x8, (3)2x6	(2)2x10, (3)2x8	(2)2x12, (3)2x10	(3)2x10	(3)2x12	
5	(2)2x6	(2)2x8, (3)2x6	(2)2x12, (3)2x8	(3)2x10	(3)2x12		
6	(2)2x8, (3)2x6	(2)2x10, (3)2x8	(2)2x12, (3)2x10	(3)2x12			
7	(2)2x8, (3)2x6	(2)2x10, (3)2x8	(3)2x10	(3)2x12			
8	(2)2x8, (3)2x6	(2)2x12, (3)2x8	(3)2x12				
9	(2)2x10, (3)2x6	(2)2x12, (3)2x10	(3)2x12				
10	(2)2x10, (3)2x8	(3)2x10	(3)2x12				
11	(2)2x10, (3)2x8	(3)2x10					
12	(2)2x10, (3)2x8	(3)2x10					
13	(2)2x12, (3)2x8	(3)2x12					
14	(2)2x12, (3)2x8	(3)2x12					
15	(2)2x12, (3)2x8	(3)2x12					
16	(2)2x12, (3)2x10	(3)2x12					
17	(2)2x12, (3)2x10	(3)2x12					
18	(3)2x10						

[1] Design conditions which fall within the shaded cells are prohibited.

BEAM ASSEMBLY

- The plies of the beam shall be fastened in accordance with FIGURE 13.
- The distance from the centerline of the fastener to the top or bottom edge of the beam shall be ½-inch minimum.
- The distance from the centerline of the fastener to the ends of the beam shall be 1-inch minimum.
- Beam plies are permitted to have splices. However, splices shall be located at inside posts connections as shown in FIGURE 11.

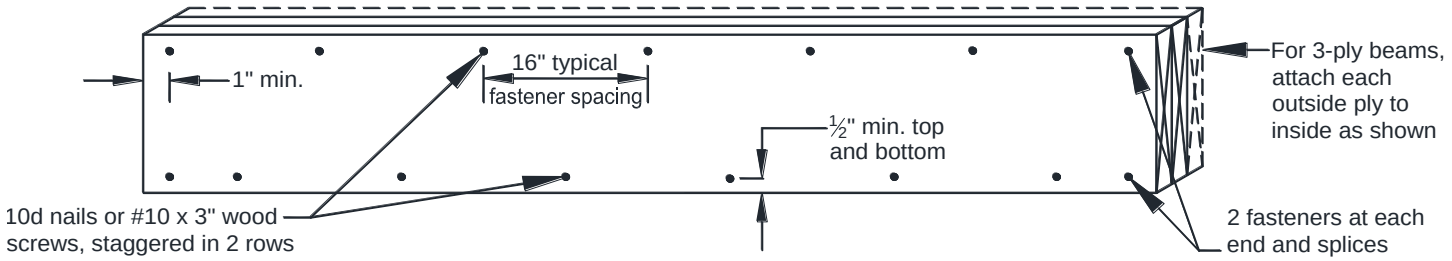

FIGURE 13: BEAM PLY FASTENING

5 ▪ Footings & Posts

FOOTING SIZE

Footing size is found by using TABLE 4 to obtain the footing type based on the beam influence width and the longest beam span length and TABLE 5 to determine the minimum footing dimensions.

- Footing sizes shall be consistent for each beam and designed for its maximum span.
- Footings shall bear on solid ground 24 inches below grade; footings shall be deeper if solid ground is not found. Bearing conditions must be verified by county inspectors prior to placement of concrete.
- When the edge of a deck footing is closer than 5 feet to an existing exterior house wall, the footing must bear at the same elevation as the existing house footings as shown in FIGURE 14.
- Do not construct footings over utility lines or service pipe. Call Miss Utility at 811 before you dig.

TABLE 4: FOOTING TYPE AND MAXIMUM POST HEIGHT [1]

Beam Influence Width (ft) less than or equal to:	Longest Beam Span Length (feet), less than or equal to:													
	6		8		10		12		14		16		18	
	Footing Type	Max. Post Ht.	Footing Type	Max. Post Ht.	Footing Type	Max. Post Ht.	Footing Type	Max. Post Ht.	Footing Type	Max. Post Ht.	Footing Type	Max. Post Ht.	Footing Type	Max. Post Ht.
2	A	14	A	14	A	14	A	14	A	14	B	14	B	14
3	A	14	A	14	B	14	B	14	B	14	B	14	C	14
4	A	14	B	14	B	14	B	14	C	14	D	14		
5	B	14	B	14	C	14	D	14	E	14				
6	B	14	B	14	D	14	E	14						
7	B	14	C	14	E	14	E	13						
8	B	14	C	14	E	13								
9	C	14	D	14	E	12								
10	D	14	E	13	F	11								
11	D	14	E	13										
12	E	14	F	12										
13	E	14	F	11										
14	E	13	F	10										
15	F	12	G	9										
16	F	12	H	9										
17	G	11	H	9										
18	G	11												

[1] Design conditions which fall within the shaded cells are prohibited.

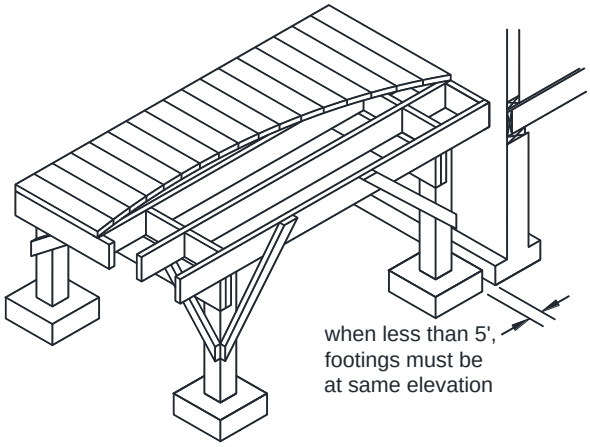

FIGURE 14: FOOTINGS ADJACENT EXISTING HOUSE

TABLE 5: FOOTING SIZE

Type	Sides of Square (inches)	Diameter of Round (inches)	Thickness (inches)
A	12	14	6
B	14	16	6
C	16	18	6
D	18	20	6
E	20	22	8
F	22	24	8
G	24	26	9
H	26	28	10

POST-TO-FOOTING CONNECTION

- Post attachment requirements shall be in accordance with FIGURE 15.
- Post anchors shall have a 1-inch minimum base.
- Posts shall be centered on the footing.

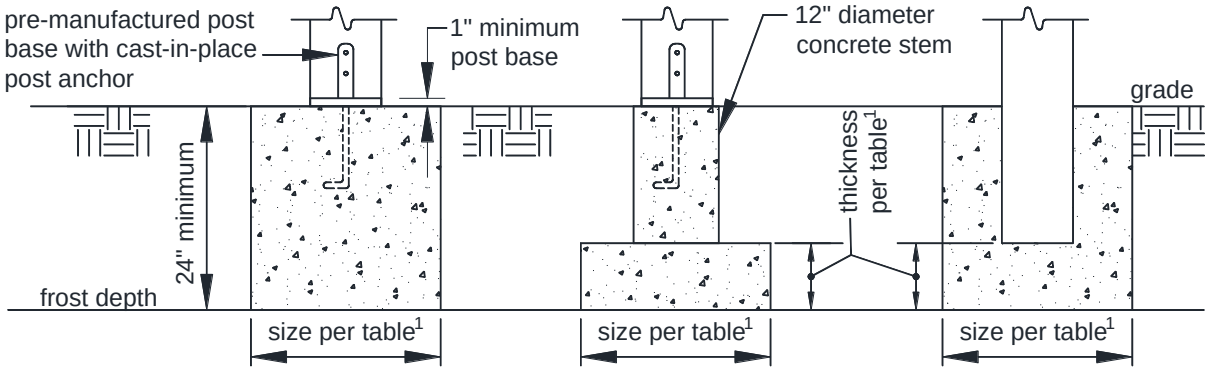

1 See TABLE 5 for footing dimensions.

FIGURE 15: FOOTINGS

POST SIZE & MAXIMUM HEIGHT

- Post size shall be 6x6 with a maximum height based on the corresponding beam influence width and longest beam span length in accordance with TABLE 4. Posts with a height less than or equal to 2.5 feet are permitted to be 4x4.
- Post height is measured from the top of the footing to the underside of the beam.
- Cut ends of posts shall be field treated with a wood preservative containing copper naphthenate which can be found in the paint department of most hardware or home center stores.

BEAM-TO-POST CONNECTION

- Beams shall be attached to 6x6 posts using one of the methods shown in FIGURE 16 or 17. Beams shall be attached to 4x4 posts using the method shown in FIGURE 17.
- 4x4 posts are prohibited from supporting three-ply beams.
- Beams shall not be attached to the sides of an unnotched post as shown in FIGURE 18.
- Pre-manufactured post caps shall be specifically designed for two- or three-ply beams and the post size used. Attachment shall be per manufacturer's instructions.

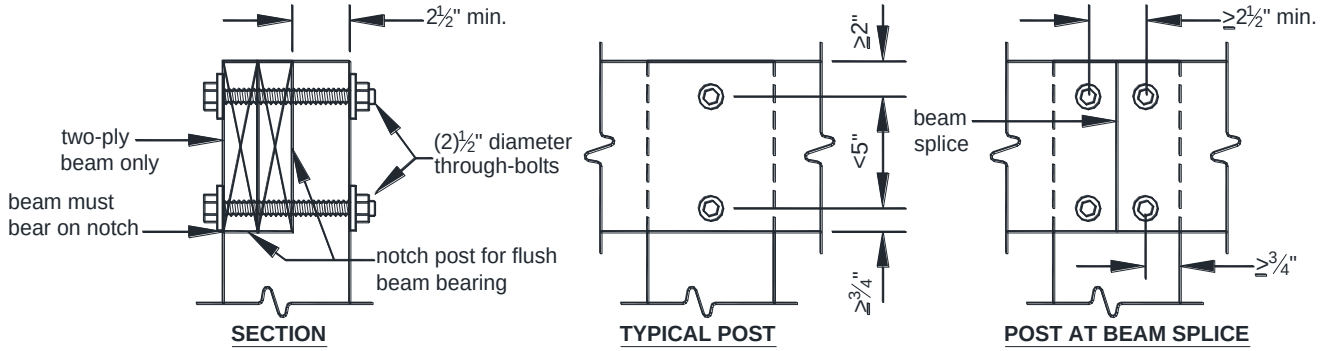

FIGURE 16: NOTCHED 6x6 POST-TO-BEAM CONNECTION

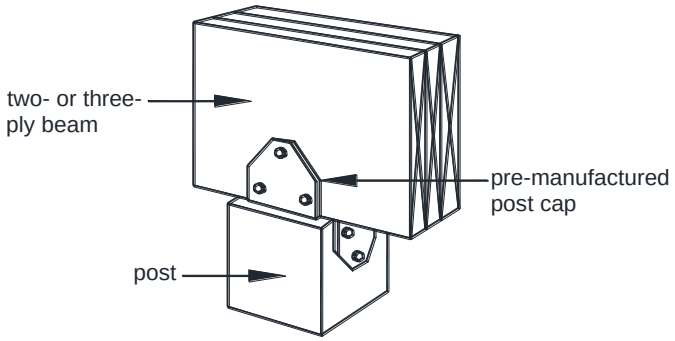

FIGURE 17: POST CAP CONNECTION

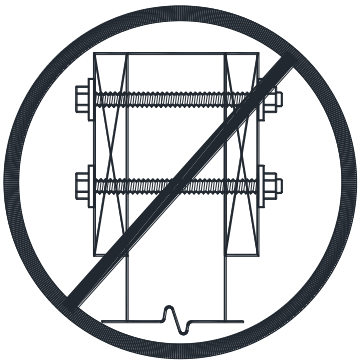

FIGURE 18: PROHIBITED CONNECTION

6 ▪ Ledger Board Attachment

GENERAL REQUIREMENTS

- Ledger boards shall be attached to the existing house in accordance with the requirements herein. Compliance is critical to ensure the safety and structural stability of your deck.
- Ledger board depth shall be greater than or equal to the depth of the deck joists, but not less than a 2x8.
- The ledger board shall be attached in accordance with one of the conditions shown in FIGURES 20 through 22.
- The existing band board shall be capable of supporting the deck. If this cannot be verified or existing conditions differ from the details herein, then a free-standing deck or an engineered design is required.
- The top of the ledger board and top of the deck joists shall be at the same elevation.

Wood I-joists. Many homes are constructed with wood I-joists, as shown in FIGURE 19. Rather than utilize a 2x band board, these systems are often constructed with a minimum 1-inch thick engineered wood product (EWP) band board capable of supporting a deck. If a minimum 1-inch EWP or 2x band board is not present, then a free-standing deck or an engineered design is required.

FIGURE 19: WOOD I-JOISTS

Flashing. Flashing shall be installed in accordance with the following requirements. See Page 3 for flashing material specifications.

- The exterior finish, i.e., house siding, must be removed prior to the installation of the ledger board.
- Continuous flashing, as shown in FIGURE 20, is required at the ledger board when attached to wood-framed construction.

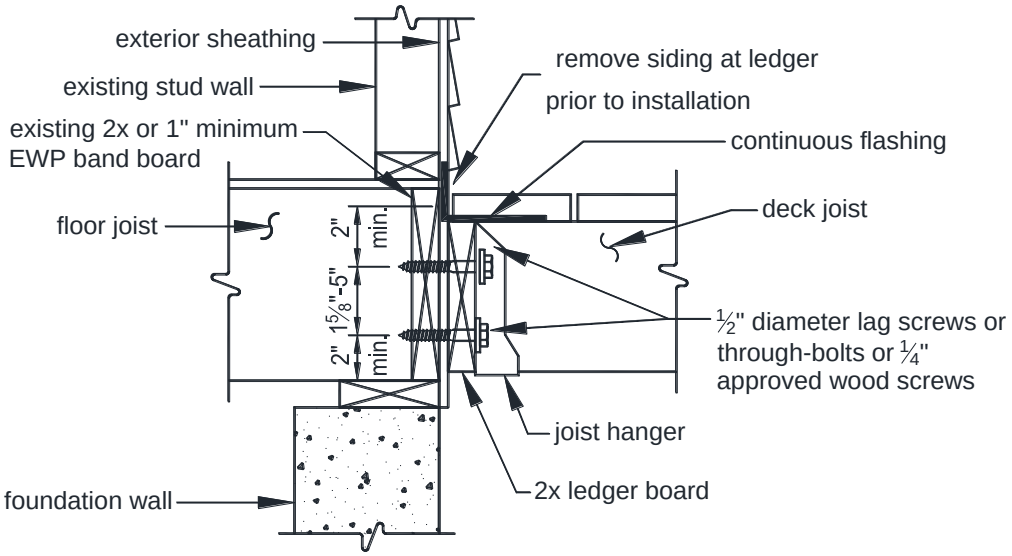

FIGURE 20: LEDGER BOARD-TO-BAND BOARD ATTACHMENT

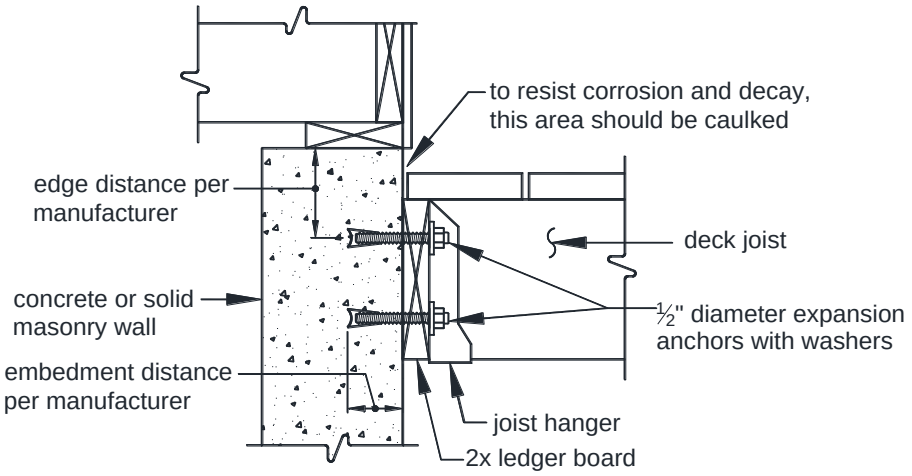

FIGURE 21: LEDGER BOARD-TO-SOLID FOUNDATION ATTACHMENT

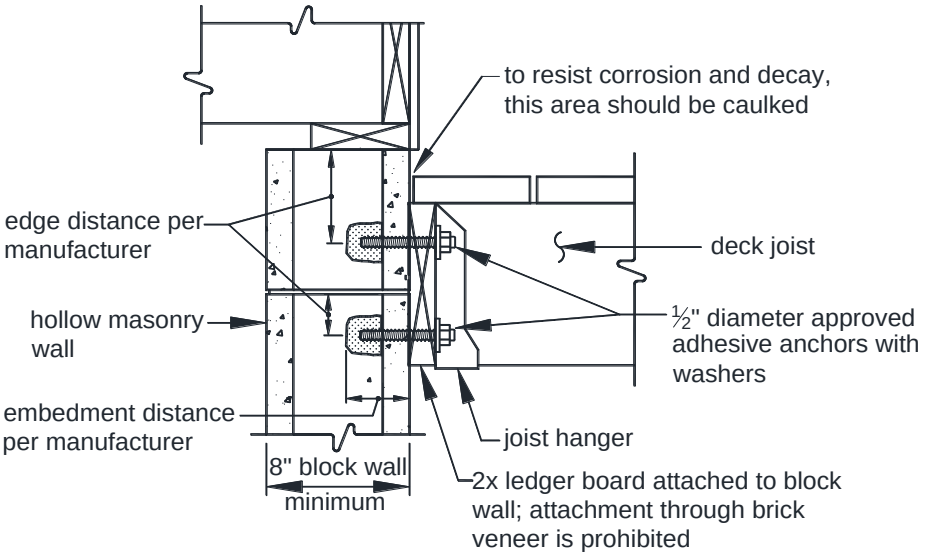

FIGURE 22: LEDGER BOARD-TO-HOLLOW FOUNDATION ATTACHMENT

Prohibited ledger attachments. The ledger board attachment conditions shown below are prohibited. In such cases, a free-standing deck or engineering design is required.

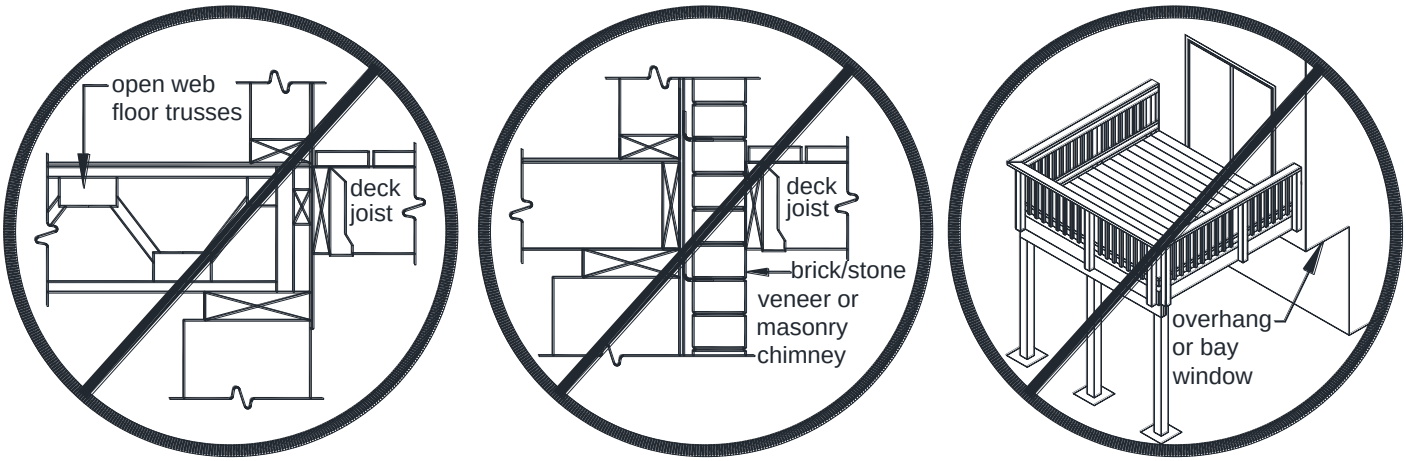

FIGURE 23: PROHIBITED LEDGER ATTACHMENTS

LEDGER BOARD FASTENERS

General requirements. Ledger board fasteners shall be installed in accordance with this section. Placement and spacing shall be in accordance with FIGURE 24 and TABLE 6. Only those fastener types noted herein are approved for use; lead anchors are prohibited. Adequacy of connections will be verified by county inspectors.

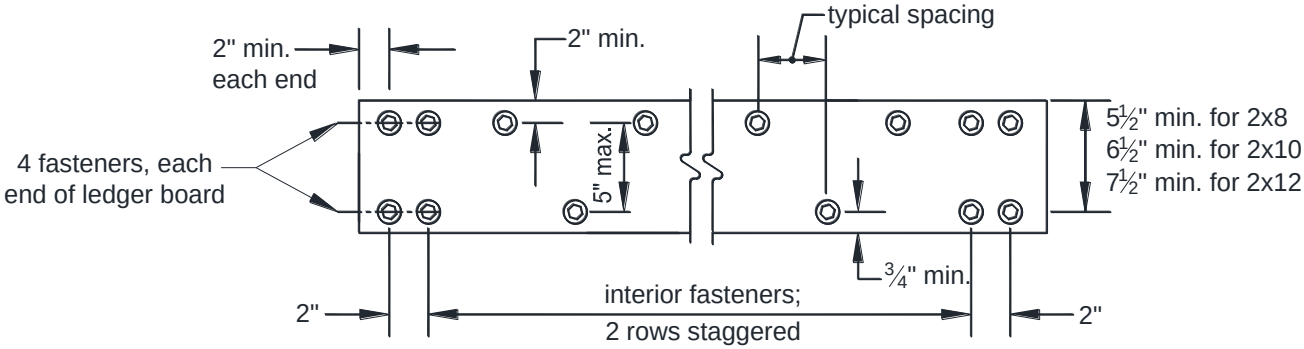

FIGURE 24: LEDGER BOARD FASTENER SPACING AND CLEARANCES

TABLE 6: LEDGER BOARD FASTENER SPACING, INCHES ON CENTER

Fastener	Band Board	Joist Span (feet), less than or equal to:						
		6	8	10	12	14	16	18
Lag Screws	EWP[1]	24	18	14	12	10	9	8
	2x lumber	30	23	18	15	13	11	10
Through-Bolts	EWP[1]	24	18	14	12	10	9	8
	2x lumber	36	36	34	29	24	21	19
Wood Screws[2]	EWP[1]	18	13	11	9	8	7	6
	2x lumber	19	14	11	9	8	7	6
Expansion Anchors	—	36	36	34	29	24	21	19
Adhesive Anchors	—	32	32	32	24	24	16	16

[1] EWP = 1-inch minimum manufactured engineered wood product; see Page 13 for more information.

[2] Wood screws shall be permitted to be spaced in accordance with its corresponding evaluation report if less restrictive than the values in TABLE 6.

Through-bolts. Through-bolts shall have a minimum ½-inch diameter. Pilot holes for through-bolts shall be $^{17}/_{32}$ to $^{9}/_{16}$ inches in diameter. Through-bolts must be equipped with washers at the bolt-head and nut. Bolts should be tightened six to 12 months after construction due to drying and wood shrinkage.

Expansion anchors. Expansion anchors shall be used only when attaching a ledger board to a concrete or solid masonry wall as shown in FIGURE 21. The bolt or threaded rod of expansion anchors shall have a ½-inch diameter minimum; in some cases, this may require a ⅝-inch anchor size. Expansion anchors must be installed per manufacturer's instructions and shall be equipped with washers.

Adhesive anchors. The adhesive anchors listed in TABLE 7 with a minimum ½-inch diameter threaded rod shall be used when attaching to concrete or solid or hollow masonry as shown in FIGURE 22. Anchors shall be installed per manufacturer's instructions and shall be equipped with washers. Adhesive cartridges must be remain on the jobsite for inspector verification.

TABLE 7: APPROVED ADHESIVE ANCHORS

Manufacturer	Product
Red Head	Epcon A7
Hilti	HY-70

Lag screws. Lag screws shall be hot-dipped galvanized or stainless steel with a ½-inch minimum diameter. Length and shank requirements shall be in accordance with FIGURE 25. Lag screws shall be equipped with washers and installed in the sequence below.

1. Drill a ½-inch diameter hole in the ledger board and a $^{5}/_{16}$-inch diameter pilot-hole into the solid connection material of the existing house.
2. Insert the lag screw through the ledger board and into the pilot hole by turning. Do not drive with a hammer. Use soap or a wood-compatible lubricant as required to facilitate tightening.
3. Tighten each lag screw snugly, but do not over tighten so as to cause wood damage.

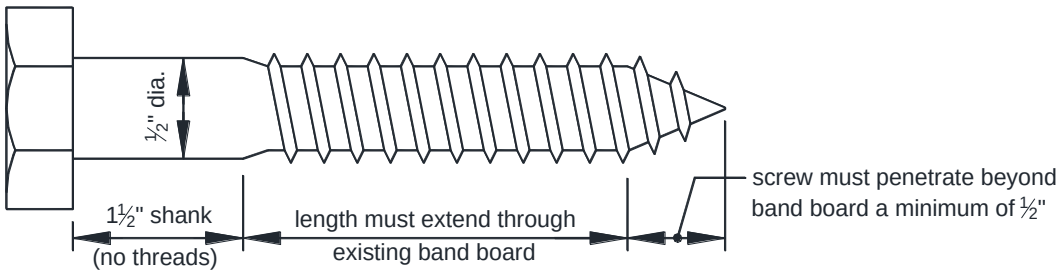

FIGURE 25: LAG SCREW

Wood screws. The wood screws listed in TABLE 8 with a ¼-inch diameter may be used to attach to wood-framed construction. Wood screws shall have a sufficient length to fully penetrate the existing house band board. Installation shall be in conformance with the manufacturer's instructions.

TABLE 8: APPROVED WOOD SCREWS

Manufacturer	Product
FastenMaster	LedgerLok
Simpson Strong-Tie	Strong-Drive Screws (SDS, SDW)

7 ▪ Lateral Support

BRACING METHODS

All decks with post heights greater than 2.5 feet are required to be designed to resist lateral load caused by human activity and environmental forces. Use TABLE 9 to determine the applicable methods based on post height and deck type as defined in Section 3.

TABLE 9: LATERAL SUPPORT REQUIREMENTS

Post Height (feet) less than or equal to:	Single Span Decks	Multi-span Decks	Free-standing Decks
2.5	None required	None required	None required
11	• Method 1 or • Method 2	• Method 2[1]	• Method 2[1] and • Method 3
14	• Method 1 and • Method 2	• Method 1 and • Method 2	• Method 1, • Method 2 and • Method 3

[1] Method 2 may be omitted from the beam closest to the existing house wall if Method 1 is utilized at the house connection.

Method-1, Tension-ties (four total):

- Install one tension-tie at each end joist and install the remaining two to inside joists equally spaced along the width of the deck as shown in FIGURE 27. A set of tension-ties shall be installed for each structurally independent section of deck.
- Tension-ties shall be attached to the joists and exterior wall per the manufacturer's instructions with specified fasteners as shown in FIGURE 28. Fasteners shall penetrate a minimum of 3 inches into the sill plate or top plate of a wood framed wall.

LTS19 DTT1

FIGURE 26: TENSION-TIES

- Approved tension-ties include: LTS19 from USP or DTT1 from Simpson Strong-Tie; see FIGURE 26. The minimum capacity of each tension-tie shall be 750 pounds.
- Where attaching to a concrete or solid masonry wall, fasteners are permitted to be substituted with expansion anchors or adhesive anchors with a threaded rod as recommended by the tension-tie manufacturer. The withdrawal capacity of the anchors shall be a minimum of 750 pounds. The anchor shall be installed per its manufacturer recommendations.

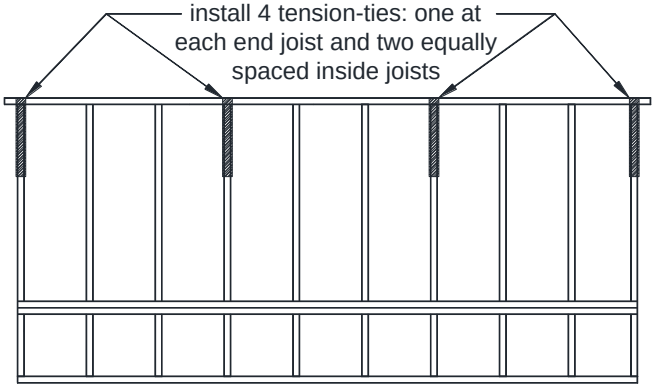

FIGURE 27: METHOD 1 - TENSION TIE LOCATIONS

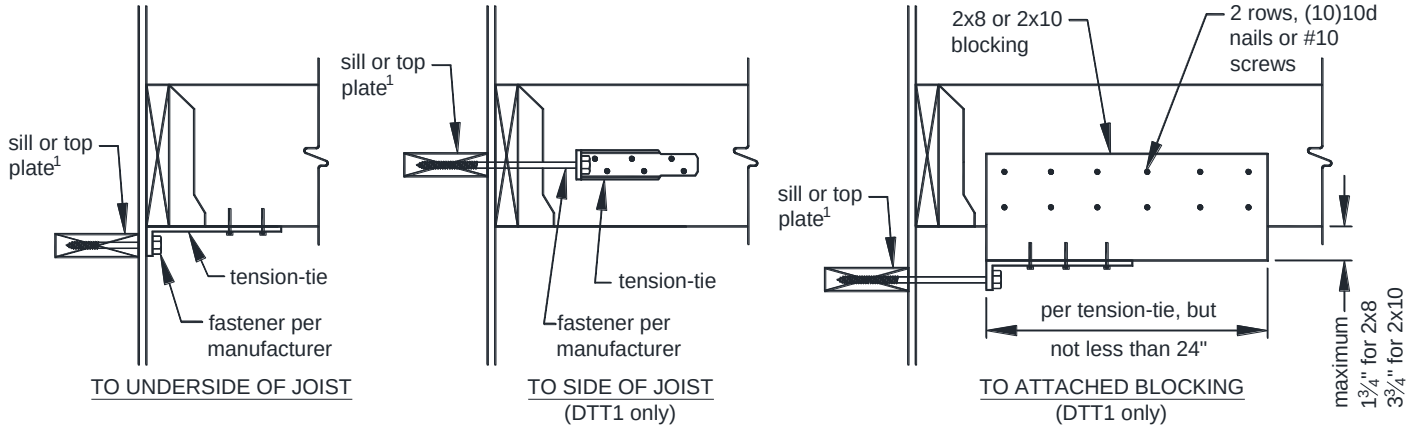

[1] Tension-ties may be anchored to concrete or solid masonry walls with expansion or adhesive anchors as permitted on Page 17.

FIGURE 28: METHOD 1 - TENSION-TIE CONNECTION

Method-2, Knee-bracing at beam:

- Knee-bracing shall be comprised of 2x or 6x6 members.
- Decks shall have 2x knee-bracing installed at each post-beam location or 6x6 knee-bracing at end posts and both sides of every other interior post in accordance with FIGURE 29.
- Connections of knee-bracing shall be in accordance with FIGURE 31 or 32.

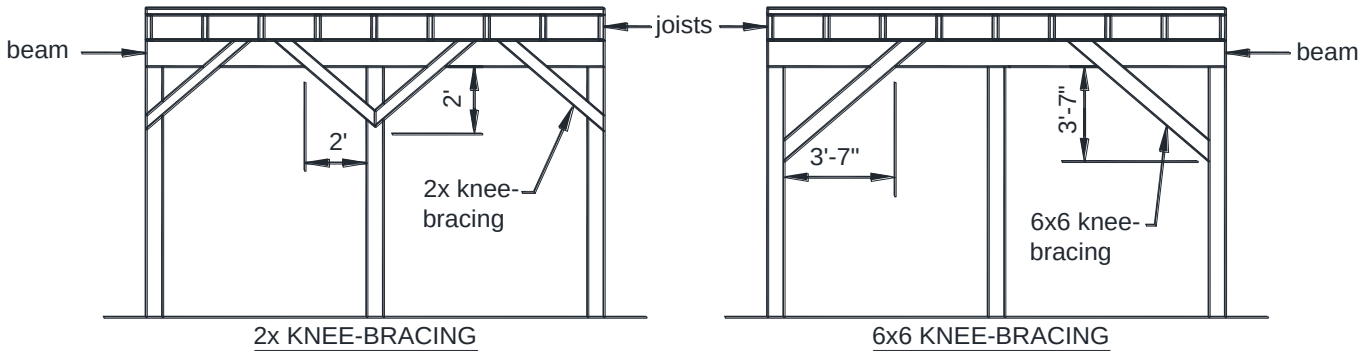

FIGURE 29: METHOD 2 - KNEE-BRACING AT BEAM-POST LOCATIONS

Method-3, Knee-bracing at joists-post locations (free-standing decks only):

- Knee-bracing shall be comprised of 2x or 6x6 members.
- Knee-bracing shall be installed at each post-joist location in accordance with FIGURE 30.
- Connections of knee-bracing shall be in accordance with FIGURE 31 or 32.

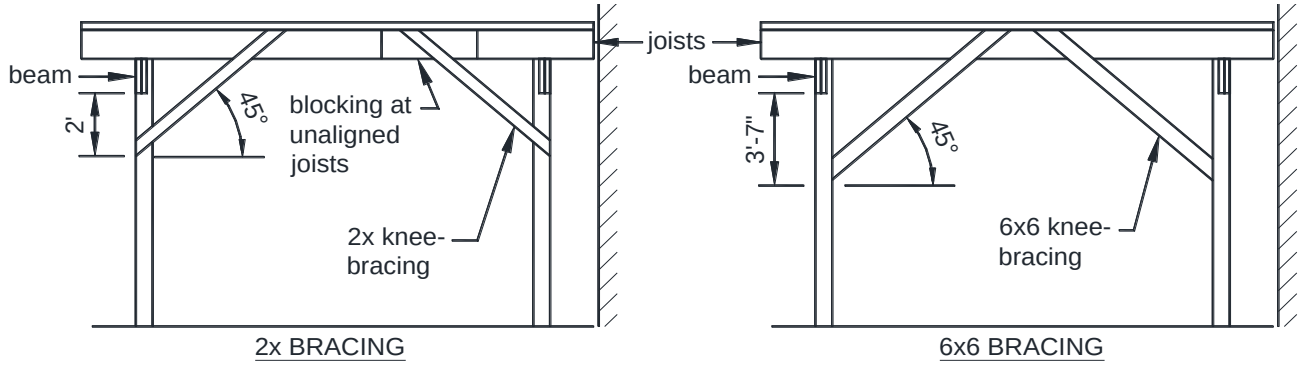

FIGURE 30: METHOD 3 - KNEE-BRACING AT JOIST-POST LOCATIONS

BRACING-TO-FRAMING CONNECTIONS

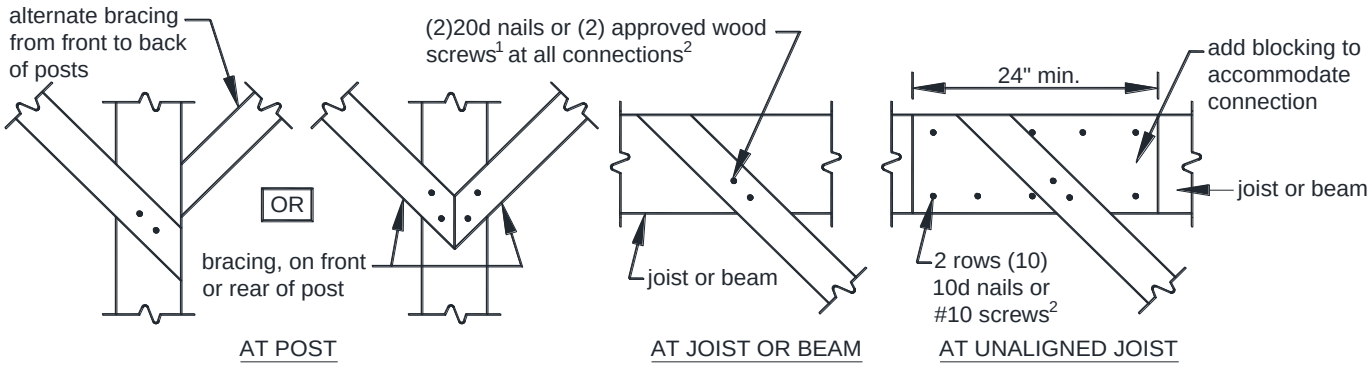

[1] Approved wood screws are listed in TABLE 8.
[2] Nails shall have a distance of ⅜ inches to all edges and ⅞ inches to ends of the bracing member.

FIGURE 31: TYPICAL CONNECTIONS OF 2x KNEE-BRACING

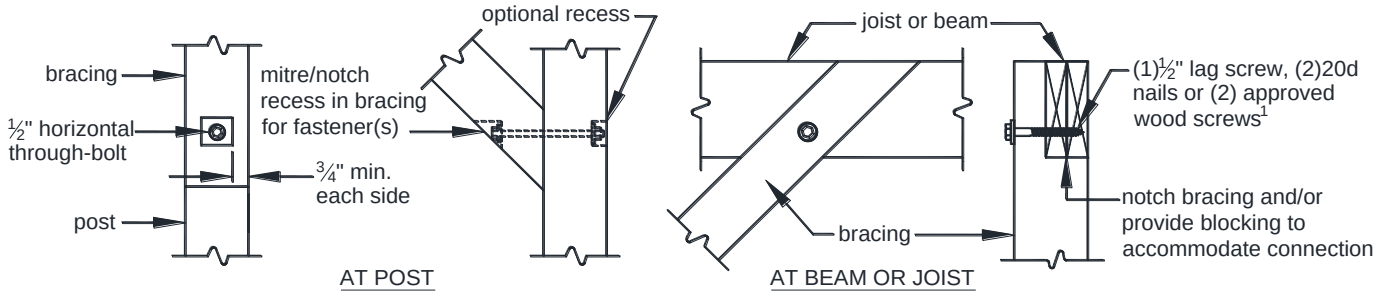

[1] Approved wood screws are listed in TABLE 8.

FIGURE 32: TYPICAL CONNECTIONS OF 6x6 KNEE-BRACING

8 ▪ Guards

GUARD CONSTRUCTION

A guard is required when a deck is greater than 30 inches above grade at a point 36 inches from the edge of the deck, as shown in FIGURE 33. Guards shall be constructed in accordance with the requirements herein; deviations are prohibited. Guards which are not required, but are nevertheless provided, must also comply with these requirements.

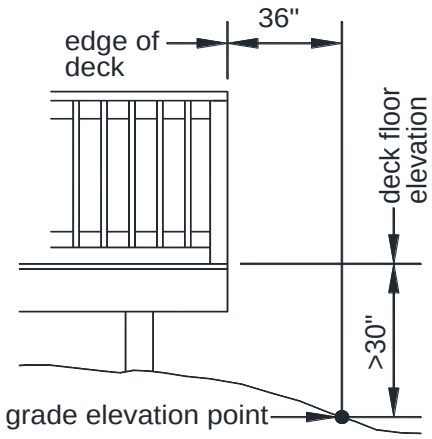

FIGURE 33: WHEN A GUARD IS REQUIRED

Plastic composites. Plastic composites of equal dimension and complying with the criteria noted on Page 3 may be substituted for the guard cap and infill elements shown in FIGURE 34 provided the manufacturer's performance criteria specifically permit such use.

Guard systems. Guard systems with a valid evaluation report from an accredited listing agency are permitted as referenced on Page 3. Pre-fabricated systems without an evaluation report will require a plan review during the permit application process.

Openings. Guards shall be constructed to restrict the passage of a 4-inch diameter sphere through any opening. Wet lumber shall be spaced such that when shrinkage occurs, a compliant opening is maintained.

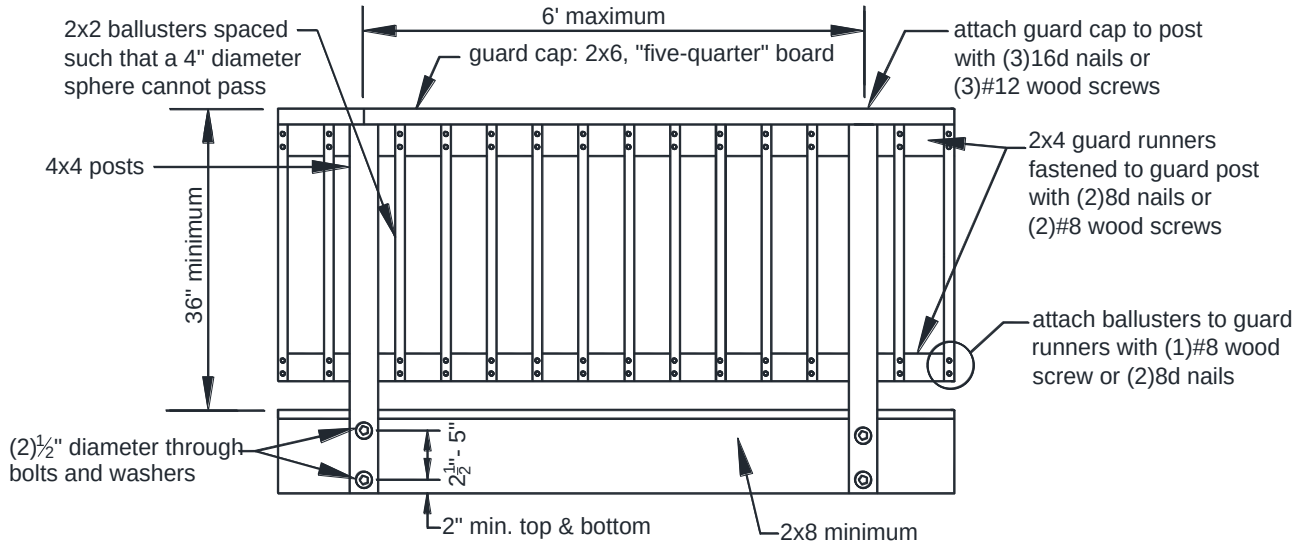

FIGURE 34: GUARD CONSTRUCTION

GUARD POST CONNECTION

Guard posts shall be attached to the deck structure in accordance with the requirements below in order to ensure resistance to imposed loads.

- Notching guard posts, as shown in FIGURE 35, is prohibited.
- Hold-down anchors, as shown in FIGURES 37 and 38, shall be used to attach the guard post to the end joist and rim joist, respectively.
- Hold-down anchors shall have a minimum capacity of 1,800 pounds.
- Guards may be attached to either side of the rim joist or end joist.

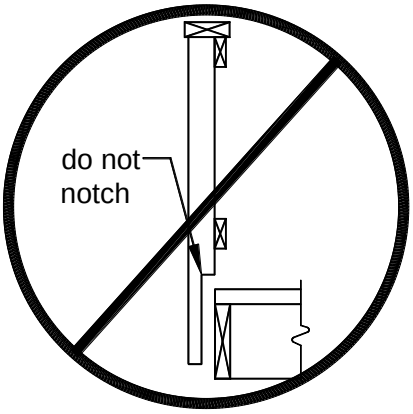

FIGURE 35: POST NOTCHES PROHIBITED

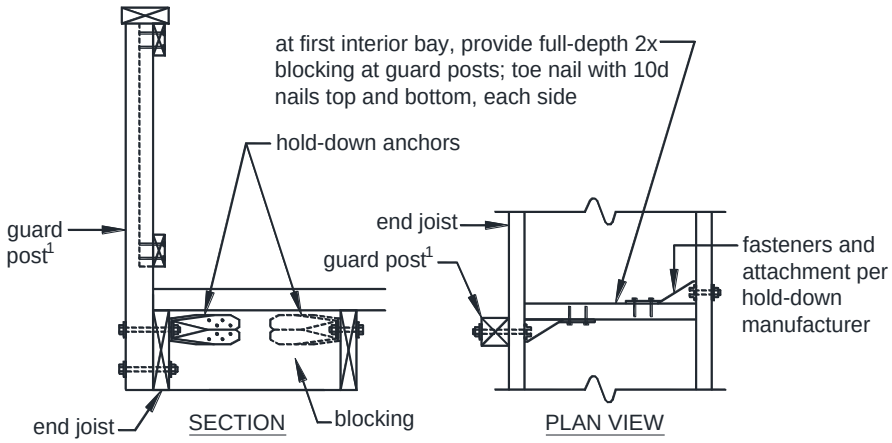

[1] Guards can be attached to either side of the end joist.

FIGURE 36: GUARD POST-TO-END JOIST

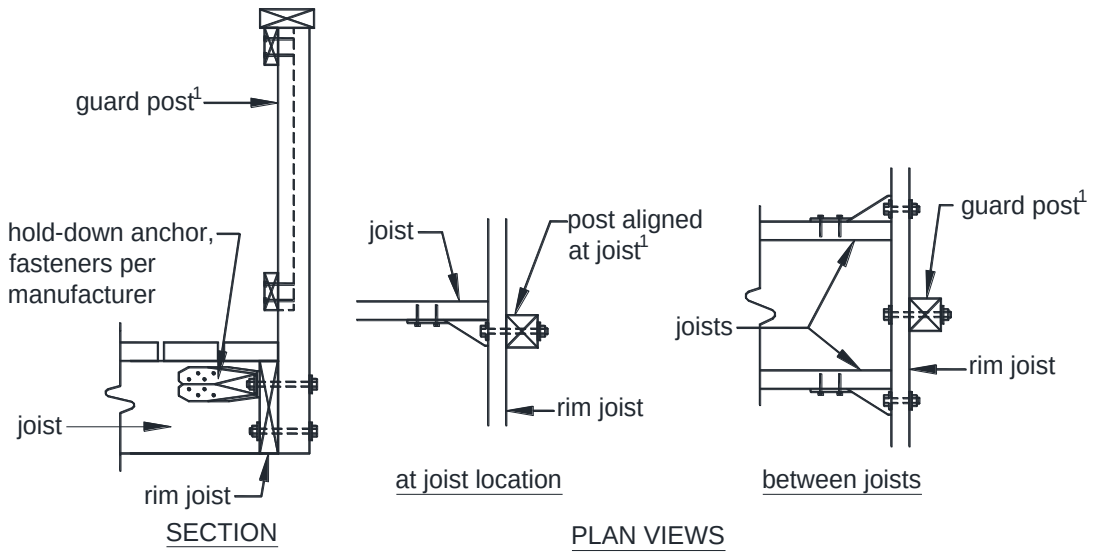

[1] Guards can be attached to either side of the rim joist.

FIGURE 37: GUARD POST-TO-RIM JOIST

9 - Stairs

STAIR GEOMETRY

Stairs shall be constructed with the dimensions listed below.

- The minimum width of a stairway is 36 inches.
- Stair geometry and opening limitations shall meet the requirements shown in FIGURE 38. Treads, risers and nosing dimensions shall not deviate at each step by more than ⅜ inches.

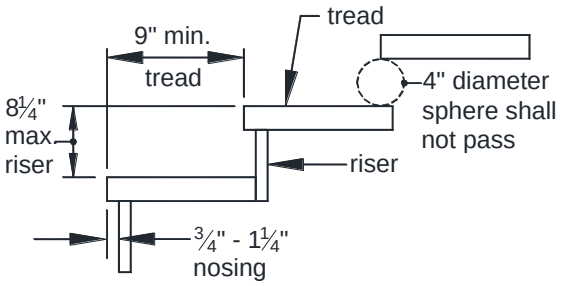

FIGURE 38: TREADS AND RISERS

STAIR LANDING

- If the total vertical height of a stairway exceeds 12 feet, then an intermediate landing is required and must be constructed as a free-standing deck.
- Stair landings may be constructed with 4x4 posts with post heights no greater than 8 feet.
- Landing widths shall be equal to the total width(s) of the stairway(s) served.

STAIR CONSTRUCTION

Stair stringers:

- Stringers shall be sawn or solid 2x12s complying with the tread and riser geometry requirements.
- Stringers shall be spaced at a maximum of 18 inches on center.
- Stringers shall bear on footings and attach to the deck or landing per FIGURE 39.
- Stringer span length is measured using the horizontally projected distance between the bearing at each end and shall not exceed the dimensions shown in FIGURE 40.

  SOLID STRINGER EXCEPTION: Solid stringers of stairways with a width equal to 36 inches shall be permitted to have a span as shown in FIGURE 40.
- Throat size of cut stringers shall not exceed the value shown in FIGURE 40.

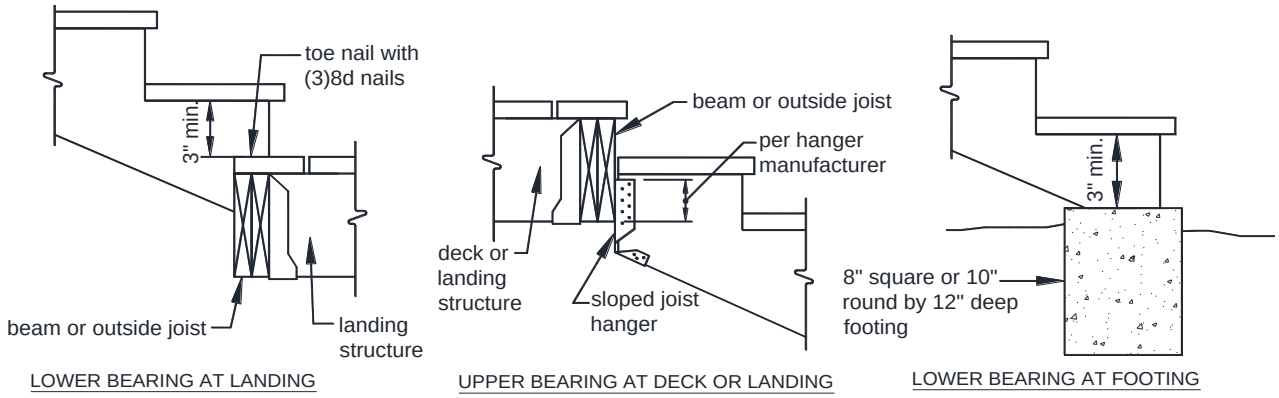

FIGURE 39: STRINGER BEARING

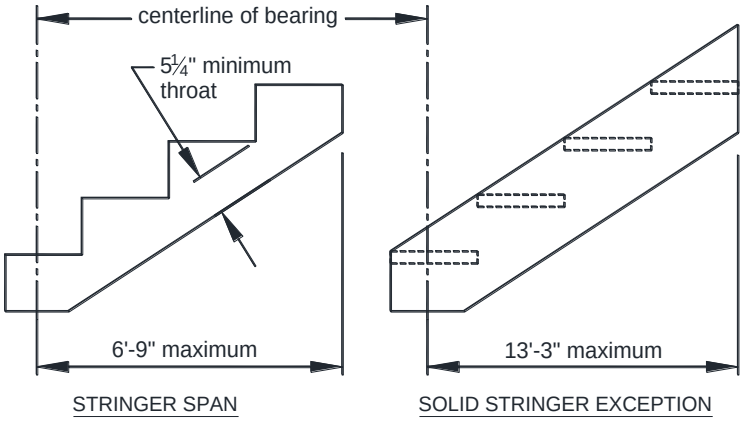

FIGURE 40: MAXIMUM STRINGER SPAN LENGTH

Tread and riser material:

- Tread material shall be equivalent to the decking specified on Page 4 and attached in accordance with FIGURE 41. The span of plastic composites shall be per manufacturer and in some cases may be less than 18 inches specified in FIGURE 41.
- Stairs constructed using the solid stringer exception shall have treads constructed of 2x wood material only; see FIGURE 41.
- Risers may be framed with 1x lumber minimum or equivalent plastic composite. Open risers are permitted provided the opening does not allow the passage of a 4-inch diameter sphere.

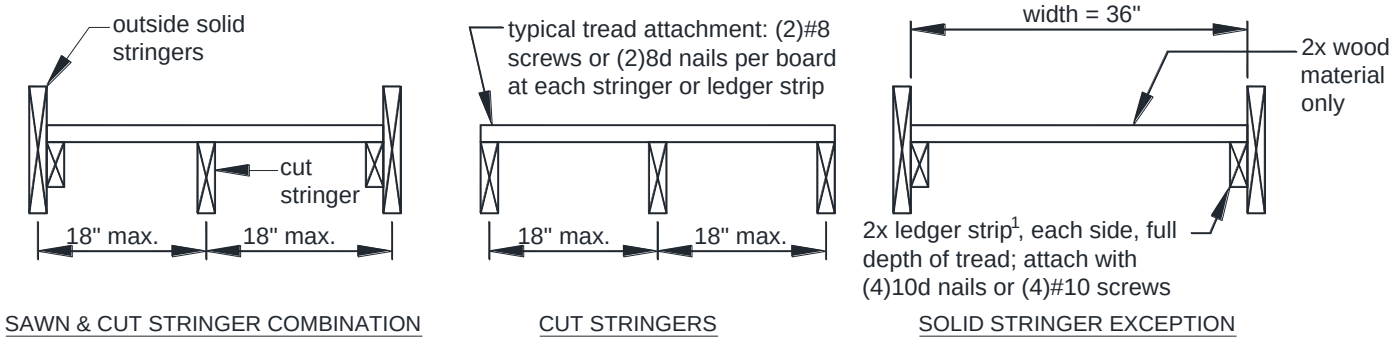

[1] A galvanized staircase clip angle, installed per manufacturer's instructions, is permitted to substitute for the 2x ledger strip.

FIGURE 41: STRINGER TREADS

Stair guards. Stair guards are required when the total rise of the stair is greater than 30 inches at a point 36 inches from the edge of the stair. Stair guards shall be constructed in accordance with Section 8 and FIGURE 42.

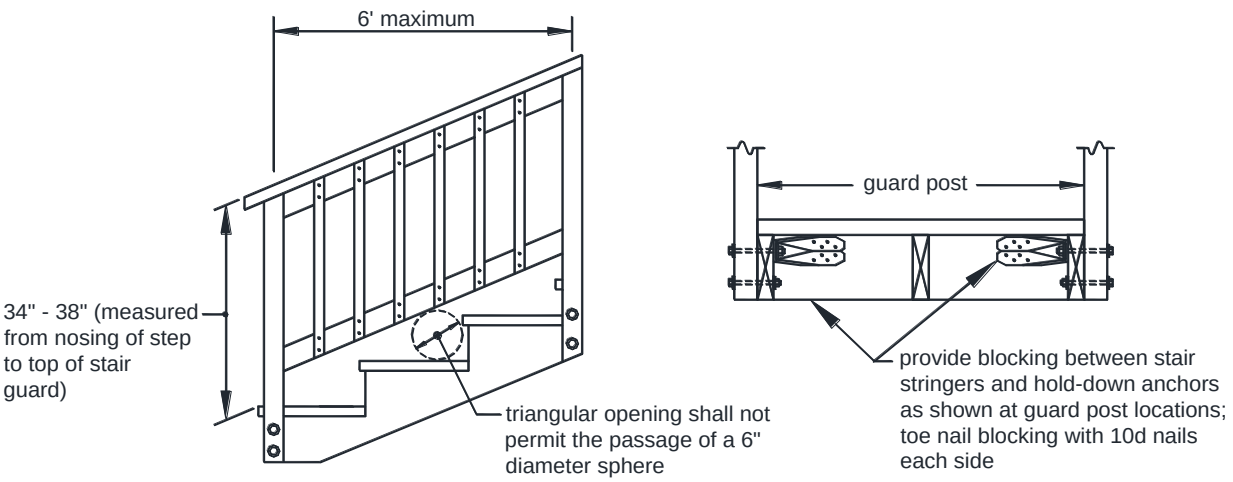

FIGURE 42: STAIR GUARD

Handrails:

- Stairs with four or more risers shall have a handrail on one side at a height between 34 to 38 inches above the nosing of the step.
- Handrails shall be attached to a stair guard or exterior wall acting as a barrier as shown in see FIGURE 43.
- Handrail and connecting hardware material shall be decay and corrosion resistant.
- Handrails shall have a smooth surface with no sharp corners and shall be graspable. Recessed sections may be shaped from a 2x6 or five-quarter board as shown in FIGURE 44.
- Handrails shall run continuously from a point directly over the lowest riser to a point directly over the highest riser and shall return to the guard or wall at each end.
- Handrails may be interrupted by guard posts at a turn in the stair only.
- Handrails installed in lieu of window safety glazing, as required on Page 4, shall be supported at appropriate intervals to ensure that when a 50-pound load is applied, the rail does not deflect into the glass.

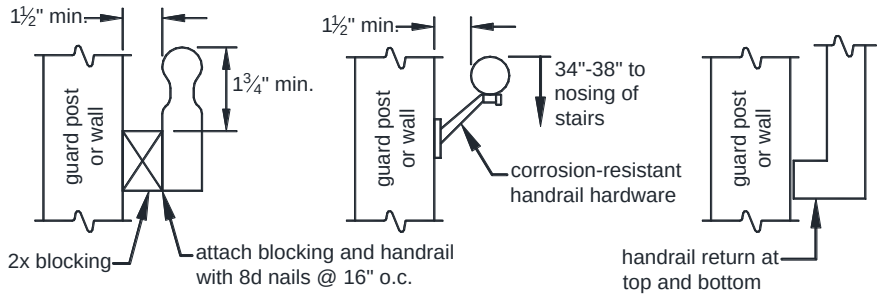

FIGURE 43: HANDRAILS

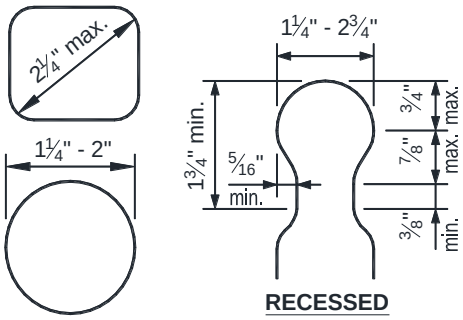

FIGURE 44: HANDRAIL GRASPABILITY

Fauquier County Deck Cover Sheet

Permit # _____

Name _____

* Draw plan view of existing house walls and the new deck. Show doors, windows, chimney, bay windows, meter base, above and below ground tanks, etc.
* Show footing, post and beam locations, each square represents 1 foot
* Label the rooms that will exit onto the deck.
* Location of stairs and the distance from windows associated with the stairs.
* Is the existing house Cantilevered _____ Brick Veneered _____
* Will new doors or windows be installed? _____
* An outlet is required and stair lighting is required. Is an electrical permit needed to add these?_____

Code **VRC 2012**

Refer to the Typical Deck Details for further information

Show the location of all deck and stair footings

Footing size ___" x ___" x ___ thick

Span between posts ____' ____"

Post Size _____" x _____"

Deck attachment to existing house:
2 x Board _____
Web Truss _____
Rim Board _____
Foundation Wall System _____
Other_____

Flashing type _____

2" x _____" ledger board attached with ____" bolts spaced ____"o.c.

Beam Size (___) 2" x _____"

Floor Joist 2" x ____ @ _____" o.c.

Type of decking material
pressure treated wood? _____
composite? _____

Dimensions of decking material _____ x _____

Decking on a diagonal to floor joist? _____

Type of railing material
pressure treated wood?_____
composite? _____

Max height above grade _____

Egress windows or doors below deck? _____

Note: o.c. = On Center
1 square = 1 foot