# SHED ON SLAB

## STICK FRAMED ROOF DETAILS

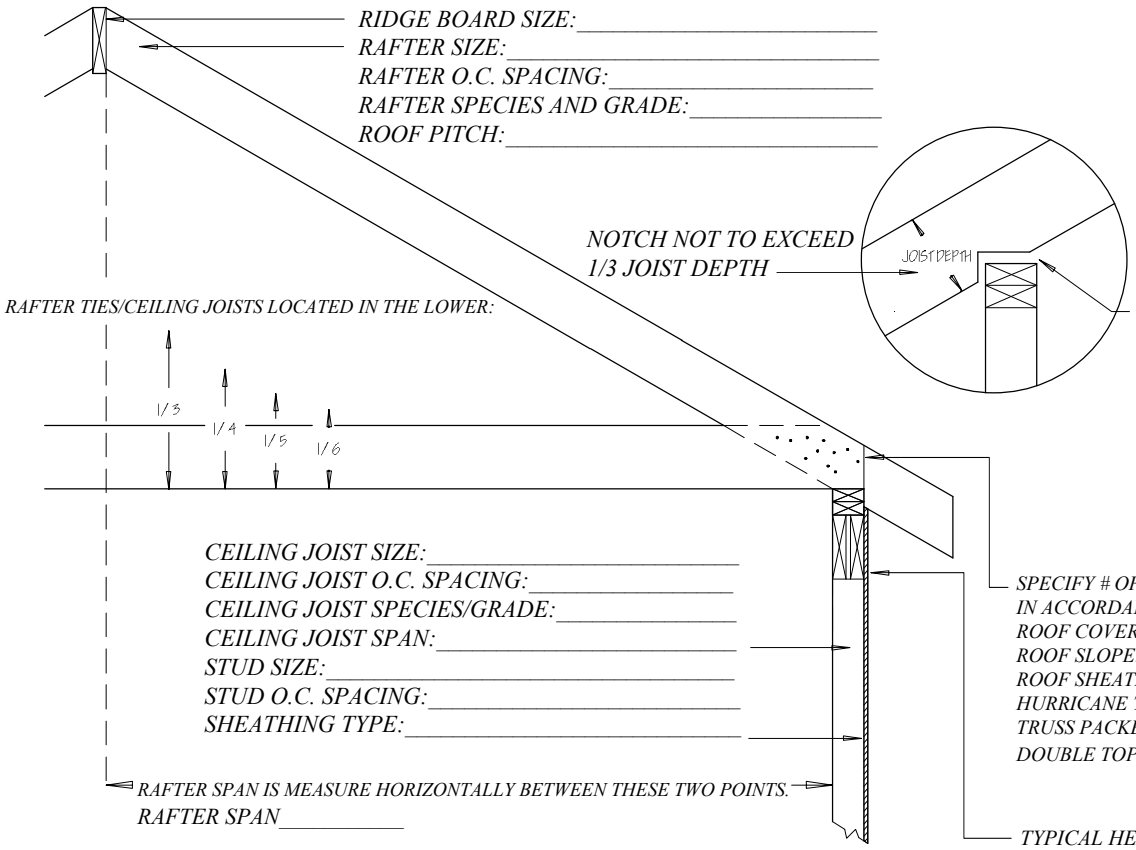


RIDGE BOARD SIZE:_____
RAFTER SIZE:_____
RAFTER O.C. SPACING:_____
RAFTER SPECIES AND GRADE:_____
ROOF PITCH:_____

NOTCH NOT TO EXCEED 1/3 JOIST DEPTH

CUT BIRD MOUTH NOTCH TO ENSURE FULL BEARING

RAFTER TIES/CEILING JOISTS LOCATED IN THE LOWER:

CEILING JOIST SIZE:_____
CEILING JOIST O.C. SPACING:_____
CEILING JOIST SPECIES/GRADE:_____
CEILING JOIST SPAN:_____
STUD SIZE:_____
STUD O.C. SPACING:_____
SHEATHING TYPE:_____

SPECIFY # OF 16D NAILS AT RAFTER/CEILING JOIST IN ACCORDANCE WITH R802.5.1(9):_____
ROOF COVERING IN ACCORDANCE WITH R905
ROOF SLOPE:_____
ROOF SHEATHING:_____
HURRICANE TIES TYPICAL
TRUSS PACKET INCLUDED OR ONSITE FOR INSPECTION
DOUBLE TOP PLATE TYPICAL (WITH TRUSSES)

RAFTER SPAN IS MEASURE HORIZONTALLY BETWEEN THESE TWO POINTS.
RAFTER SPAN_____

TYPICAL HEADER SIZE:_____
TYPICAL HEADER SPECIES:_____
TYPICAL HEADER GRADE:_____
MAXIMUM OPENING ON BEARING SIDE:_____
WALL HEIGHT:_____

CONCRETE FLOOR ON GROUND MUST BE SLOPED IF STRUCTURE IS USED FOR VEHICLE STORAGE

SUBSLAB FILL SHALL NOT EXCEED 24" OF SAND OR GRAVEL AND 8 INCHES OF EARTH

A 4 INCH BASE COURSE OF CLEAN GRADED SAND, GRAVEL OR CRUSHED STONE MUST BE PROVIDED FOR BASE MATERIAL IF THE SLAB IS BELOW GRADE.

A SCALED TOP VIEW OF THE STRUCTURE MUST BE ATTACHED TO THIS DETAIL INCLUDING PLACEMENT OF OPENINGS AND OPENING SIZES. A SKETCH ON GRAPH PAPER WILL SATISFY THIS REQUIREMENT

SILL PLATE MUST BE PRESSURE TREATED

PLACE ONE #5 REBAR IN MIDDLE 1/3 OF FOOTING DEPTH.

SILL PLATE MUST BE FASTENED WITH 1/2" ANCHOR BOLTS FASTENED TO 6 ' O.C. NO MORE THAN 12" AND NO LESS THAN 3 1/2" FROM PLATE ENDS AND JOINTS.

MAINTAIN 6" CLEARANCE BETWEEN SHEATHING AND GRADE.

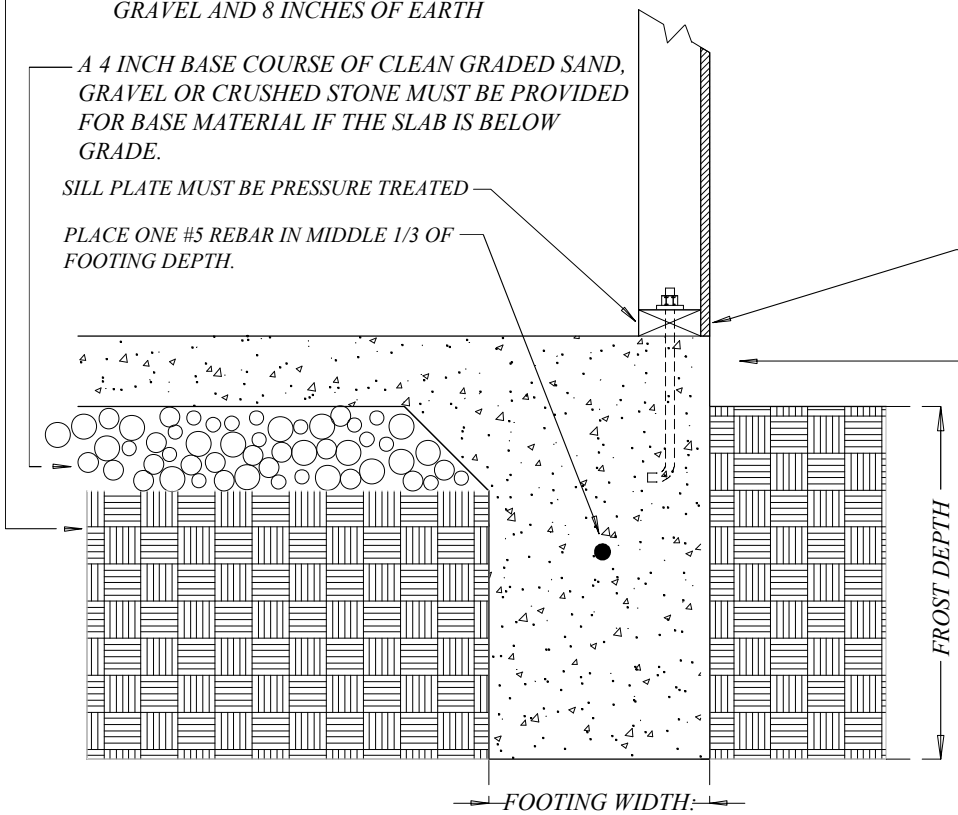


IF STRUCTURE IS LESS THAN 600 SQUARE FEET THE BOTOOM OF THE FOOTINGS SHALL BE 12" BELOW GRADE. IF THE STRUCTURE IS GREATER THAN 600 SQUARE FEET THE BOTTOM OF THE FOOTING SHALL BE 24" BELOW GRADE.