FAUQUIER COUNTY, VIRGINIA

NEW BALTIMORE SERVICE DISTRICT TRAFFIC IMPACT STUDY

Prepared for:

Fauquier County
Department of Community Development
10 Hotel Street
Warrenton, Virginia
(540) 422-8210
Contact: Kimberley Fogle, AICP

Prepared by:

637 BERKMAR CIRCLE
CHARLOTTESVILLE, VA 22901

February, 2013
(Revised September 24, 2014)

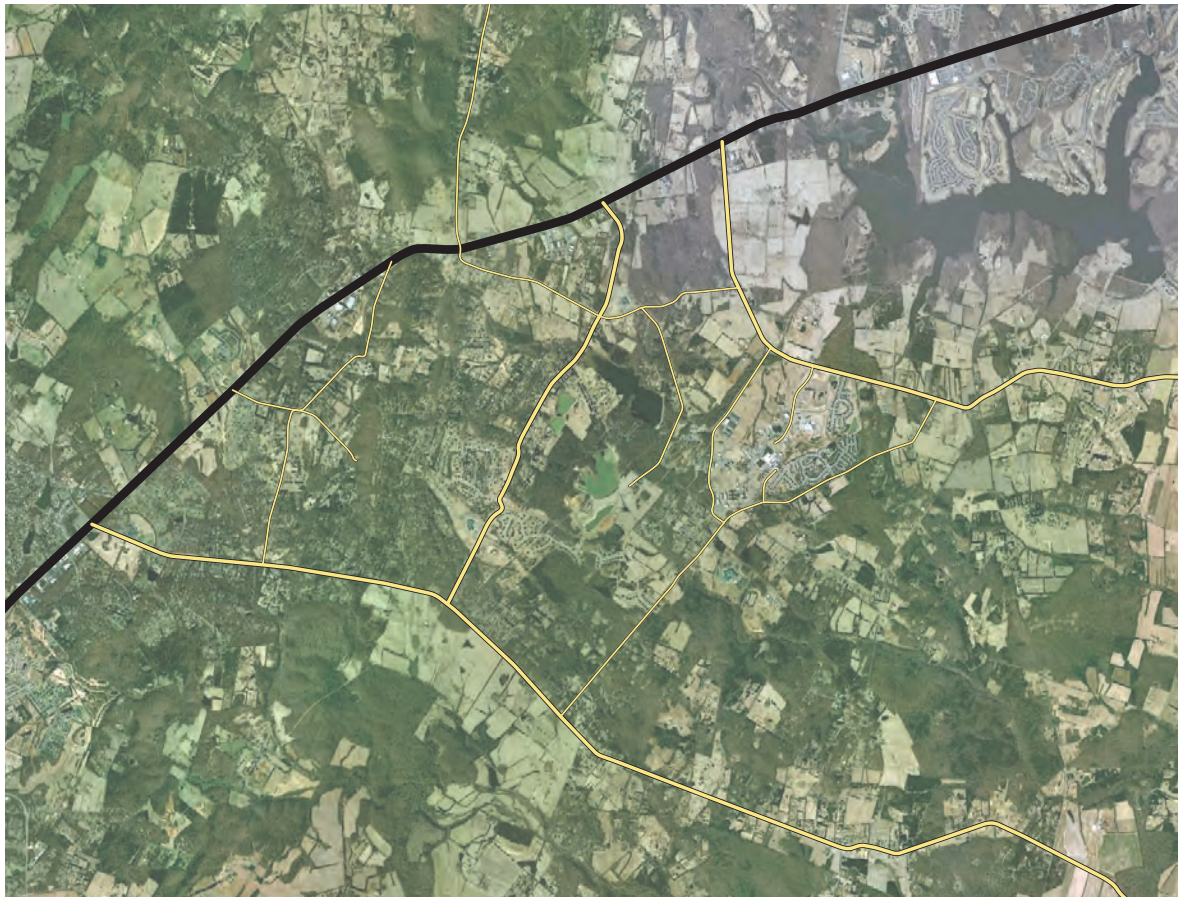

Table of Contents

Introduction 01

Analysis Methodology 05

Existing Conditions Analysis 06

Future Conditions Analysis 15

Summary of Projects 27

Figures

Figure 1: Location and Vicinity Map
Figure 2: New Baltimore Service District Study Area and Road Network
Figure 3: New Baltimore Service District Study Intersections
Figure 4: New Baltimore Service District Existing Intersection Volumes (2011)
Figure 5: New Baltimore Service District Existing PM Peak Link Volumes (2011)
Figure 6: New Baltimore Service District Existing PM Peak Link Level of Service (2011)
Figure 7: New Baltimore Service District Future E+C Road Network
Figure 8: New Baltimore Service District Future Intersection Volumes (2031)
Figure 9: New Baltimore Service District Future PM Peak Link Volumes (2031)
Figure 10: New Baltimore Service District Future PM Peak Link Level of Service (2031)
Figure 11: Improvement Projects Index
Figure 12: Improvement Project #1 - Route 29 / Cross Creek Parkway
Figure 13: Improvement Project #2 - Route 29 / Route 600
Figure 14: Improvement Project #3 - Route 29 / Route 676
Figure 15: Improvement Project #4 - Route 29 / Route 215
Figure 16: Improvement Project #5 - Route 600 / Route 676
Figure 17: Improvement Project #6 - Route 600 / Route 215
Figure 18: Improvement Project #8 - Route 29 / Route 605
Figure 19: Improvement Project #9 - Route 29 / Baldwin Street
Figure 20: Improvement Project #10 - Route 29 / Grays Mill Road

Tables

Table 1: Intersection LOS and Delay Thresholds
Table 2: New Baltimore Service District Existing Conditions Delay and LOS (2011)
Table 3: New Baltimore Service District Future Delay and LOS (2031)
Table 4: New Baltimore Service District Future with Mitigations Delay and LOS (2031)
Table 5: New Baltimore Service District 2031 Link Traffic Volumes Projection

Appendices

Appendix A New Baltimore Service District Travel Demand Model Development
Appendix B Peak Hour Turning Movement Counts

Introduction

This traffic technical memorandum provides a summary of the traffic analyses efforts undertaken in support of the 2012/2013 update to the New Baltimore Service District Plan. The County commissioned this effort in an effort to gain an understanding of existing traffic volumes and concerns and also future projected traffic volumes and road network needs in the coming 20 years. The data and findings developed through this study effort will be used to inform the transportation section of the service district plan update.

The study effort generally consisted of:

- collecting peak hour turning movement counts at sixteen (16) intersections in the service district;
- gathering road network link volumes from VDOT sources and derivations of 24 hour volumes from the peak hour volumes;
- modeling existing conditions at the sixteen key intersections and identifying capacity concerns;
- developing a travel demand model for the service district that effectively calculates the projected future (20 year horizon) road link and intersection volumes;
- modeling the future conditions at the sixteen key intersections and identifying future capacity concerns;
- developing mitigation strategies to add intersection capacity where needed;
- identifying road link capacity concerns; and
- providing a summary of likely future project needs for intersections and road segments.

This memorandum provides the summary of the traffic operational analyses, findings, and recommendations. A standalone memorandum, included as an appendix to this document, provides a detailed summary of the travel demand modeling process and findings. The travel demand model provides a strong and dynamic tool for identifying overall road system impacts resulting from future proposed developments, which provides critically important information needed for prioritizing future system improvements.

The following **Figure 1** shows the project study area, which corresponds to the service district area. **Figure 2** illustrates the study traffic network and **Figure 3** provides a more detailed view of the study intersections.

Figure 1: Location and Vicinity Map

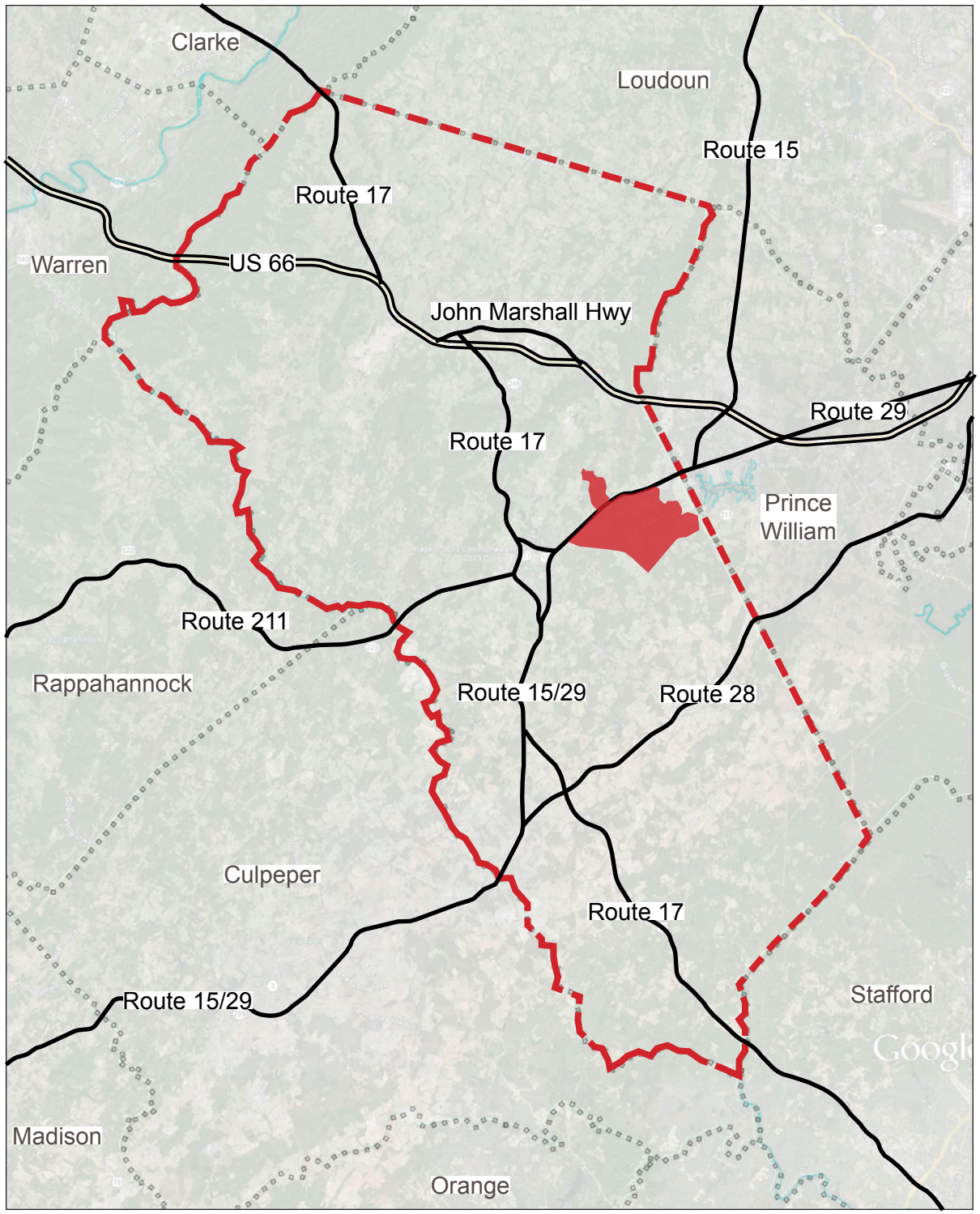

LEGEND

- Fauquier County
- New Baltimore Service District
- Major Roads
- County Borders

Figure 2: New Baltimore Service District Study Area and Road Network

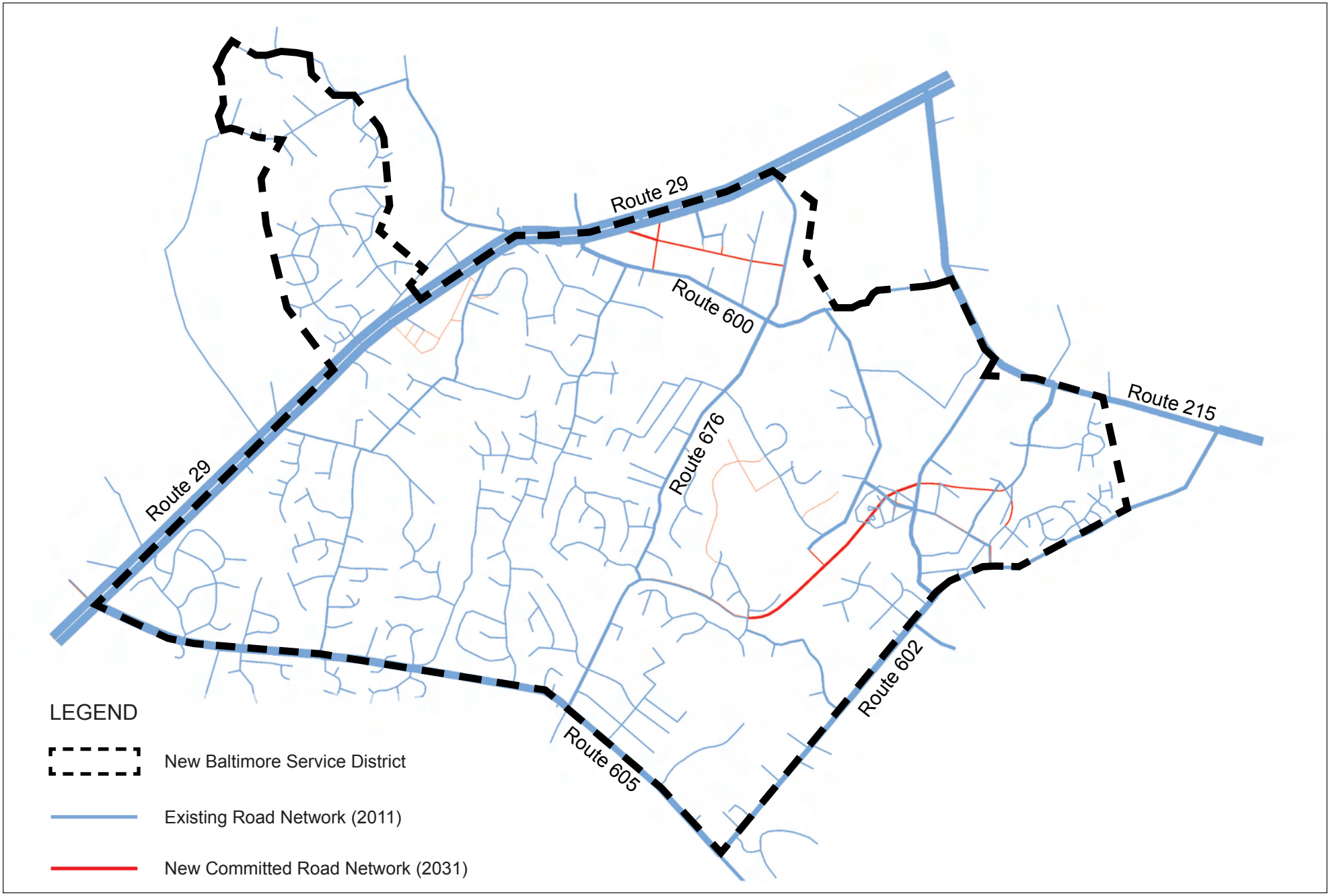

Figure 3: New Baltimore Service District Study Intersections

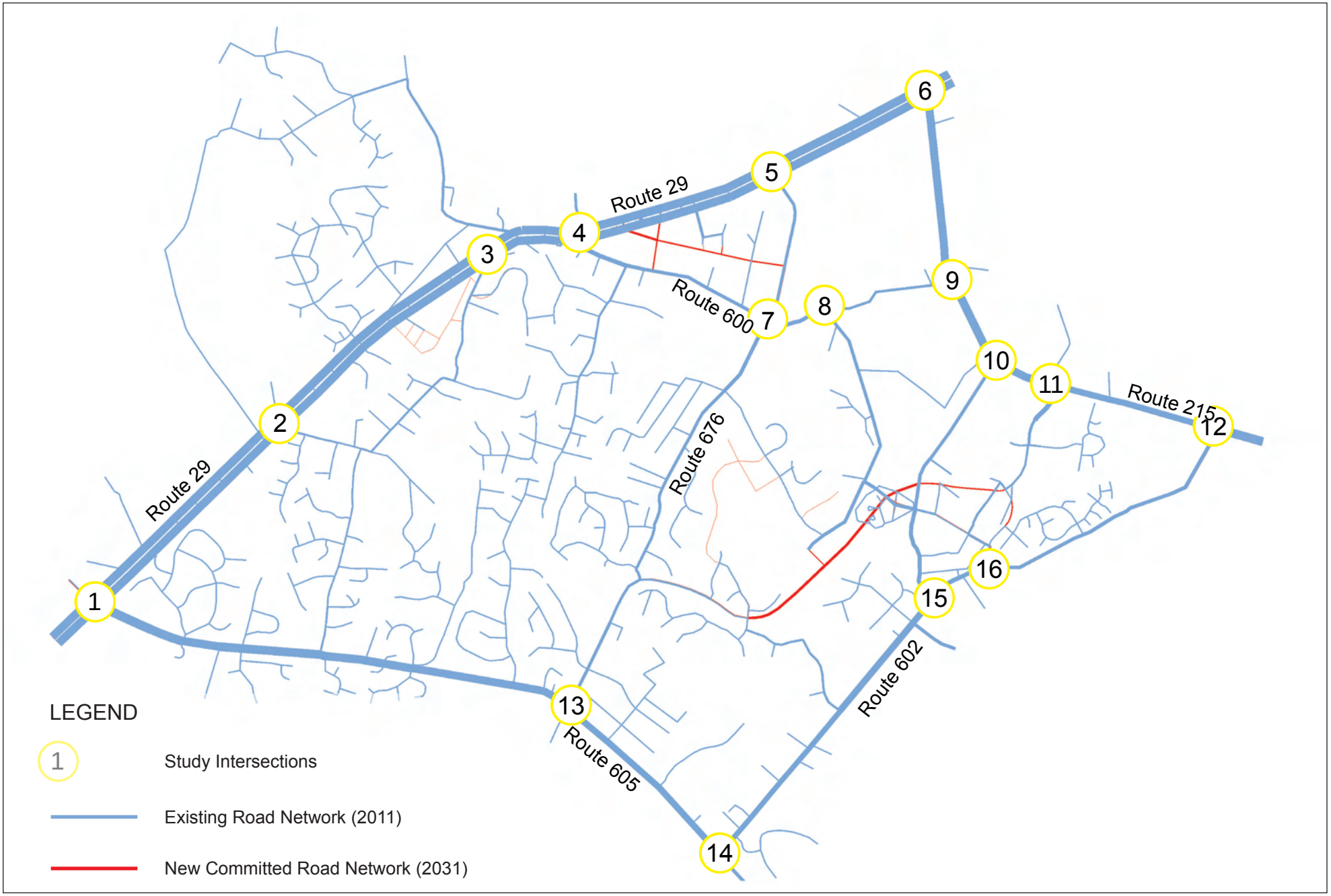

Analysis Methodology

The analysis process included a data collection effort at key intersections, assembly of average daily traffic counts, developing projections for future traffic volumes, and analyses of existing, future, and mitigated conditions.

The intersection capacity analyses were performed using Synchro per the methodology documented in the Highway Capacity Manual (Transportation Research Board). The HCM based calculations are provided in this report.

Capacity analyses are utilized to determine a Level of Service (LOS) for a given intersection operating under either signalized or unsignalized control. The LOS is based on estimated delay and range from LOS A, the best, to LOS F, the worst. In general LOS A and LOS B indicate little or no delay, LOS C indicates average delay, LOS D indicates delay is increasing and noticeable, LOS E indicates the limit of acceptable delay and LOS F is characteristic of over saturated conditions (i.e. volumes exceed capacity). The actual delays associated with these levels of service are identified in **Table 1**.

Table 1
Intersection LOS and Delay Thresholds

LOS	Unsignalized Int. Delay (secs)	Signalized Int. Delay (secs)
A	0-10	<10
B	>10-15	>10-20
C	>15-25	>20-35
D	>25-35	>35-55
E	>35-50	>55-80
F	>50	>80

Source: Highway Capacity Manual

Future volume projections were developed through the use of a travel demand model. See the demand model documentation provided in **Appendix A** of this document for a detailed summary of the demand modeling methodology. The growth in traffic volumes in and around the service district is a result of external trips passing through the study area and local growth of households and employment within the study area. A twenty year planning horizon was deemed appropriate for this traffic analysis effort as that is the timeframe that is typically used for regional and statewide planning efforts. Specifics of the demand modeling process, including projections for growth in households and employment in each of the traffic analysis zones (sub sections of the service district) are described in detail in the demand modeling summary memorandum (attached **Appendix A**).

Existing Conditions Analysis

Manual AM and PM peak hour turning movement volumes were collected for the 16 intersections. These counts were conducted from 6 – 9 AM and 4 – 7 PM, on a Tuesday, Wednesday or Thursday, during the spring of 2012. A summary of the peak hour turning movement counts is attached **(Appendix B**). The following **Figure 4** illustrates the existing turning movement counts at the sixteen study intersections as noted below:

1. US 15 / US 29 & Dumfries Road – Signalized
2. US 15 / US 29 & Baldwin Street – Not Signalized
3. US 15 / US 29 & Grays Mill Road – Not Signalized
4. US 15 / US 29 & Broad Run Church Road – Signalized
5. US 15 / US 29 & Riley Road – Not Signalized
6. US 15 / US 29 & Vint Hill Road – Signalized
7. Broad Run Church Road & Riley Road – Not Signalized
8. Broad Run Church Road & Shepherdstown Road – Not Signalized
9. Broad Run Church Road & Vint Hill Road – Not Signalized
10. Vint Hill Road & Kennedy Road – Not Signalized
11. Vint Hill Road & Vint Hill Parkway – Not Signalized
12. Vint Hill Road & Auburn Road – Not Signalized
13. Dumfries Road & Riley Road – Not Signalized
14. Dumfries Road & Rogues Road – Not Signalized
15. Rogues Road & Finch Road – Not Signalized
16. Rogues Road & Watson Road – Not Signalized

Figure 4: New Baltimore Service District Existing Intersection Volumes (2011)

The following table summarizes the findings from the level of service (LOS) and capacity analysis.

The existing intersection operating conditions are summarized in **Table 2 – Existing Conditions Delay and LOS**. Delay and LOS are summarized by movement for each of the study area intersections. Most of the intersections (11 of the 16) currently operate within acceptable delay and LOS parameters (all movements operate at LOS D or better). The operational issues at the other five study intersections are highlighted in yellow for ease of identification. Each of the intersections with operational deficiencies are along the US 15 / 29 corridor. The following information provides a summary and discussion of the existing operational issues.

Table 2: New Baltimore Service District Existing Conditions Delay and LOS (2011)

No.	Intersection			Existing AM LOS	Existing PM LOS
1	Route 29/Dumfries Roac	-Signalized		C	D
		Dumfries EB	Through/Left	E	D
		Dumfries EB	Right	D	D
		Dumfries WB	Left	E	E
		Dumfries WB	Through/Left	E	E
		Dumfries WB	Right	D	D
		Route 29 NB	Left	E	E
		Route 29 NB	Through	C	C
		Route 29 NB	Right	C	C
		Route 29 SB	Left	E	D
		Route 29 SB	Through	C	E
		Route 29 SB	Right	C	D
2	Route 29/Baldwin	-Unsignalized			
		Suffield EB	Right/Through/Lef	F	F
		Baldwin WB	Right/Through/Lef	F	F
		Route 29 NB	Left	B	C
		Route 29 NB	Through	A	A
		Route 29 NB	Right	A	A
		Route 29 SB	Left	C	B
		Route 29 SB	Through	A	A
		Route 29 SB	Right	A	A
3	Route 29/Grays Mill	-Unsignalized			
		Route 29 EB	Through	A	A
		Route 29 EB	Right	A	A
		Route 29 WB	Left	C	B
		Route 29 WB	Through	A	A
		Grays Mill NB	Right/Left	F	F
4	Route 29/Broad Run	-Signalized			
		Route 29 EB	Left	E	D
		Route 29 EB	Through	E	C
		Route 29 EB	Right	B	C
		Route 29 WB	Left	E	D
		Route 29 WB	Through	B	E
		Route 29 WB	Right	B	B
		Broad Run NB	Left	E	F
		Broad Run NB	Through/Right	D	D
		Broad Run SB	Left	D	D
		Broad Run SB	Through/Right	D	D
5	Route 29/Riley	-Unsignalized			
		Route 29 EB	Through	A	A
		Route 29 EB	Right	A	A
		Route 29 WB	Left	C	B
		Route 29 WB	Through	A	A
		Riley NB	Left	F	F
		Riley NB	Right	F	B
6	Route 29/Vint Hill	-Signalized		E	B
		Route 29 EB	Through	F	B
		Route 29 EB	Right	A	B
		Route 29 WB	Left	C	B
		Route 29 WB	Through	A	B
		Route 29 WB	Right	A	A
		Vint Hill NB	Through/Left	D	E
		Vint Hill NB	Right	E	D
		Vint Hill SB	Right/Through/Lef	A	D
7	Broad Run/Riley	-Unsignalized			
		Broad Run EB	Through/Left	A	A
		Broad Run EB	Right	A	A
		Broad Run WB	Right/Through/Lef	A	A
		Riley NB	Right/Through/Lef	B	B
		Riley SB	Right/Through/Lef	B	B

No.	Intersection			Existing AM LOS	Existing PM LOS
8	Broad Run/Shepherdstow	-Unsignalized			
		Broad Run EB	Through/Right	A	A
		Broad Run WB	Through/Left	A	A
		Shepherdstown N	Right/Left	B	B
9	Broad Run/Vint Hill	-Unsignalized			
		Broad Run EB	Right/Left	B	B
		Vint Hill NB	Through/Left	A	A
		Vint Hill SB	Through/Right	A	A
10	Kennedy/Vint Hill	-Unsignalized			
		Vint Hill EB	Through	A	A
		Vint Hill EB	Right	A	A
		Kennedy NB	Left	C	C
		Kennedy NB	Right	A	A
		Vint Hill WB	Left	A	A
		Vint Hill WB	Through	A	A
11	Vint Hill Pkwy/Vint Hill Rd	-Unsignalized			
		Vint Hill Rd EB	Through	A	A
		Vint Hill Rd EB	Right	A	A
		Vint Hill Rd WB	Left	A	A
		Vint Hill Rd WB	Through	A	A
		Vint Hill Pkwy NB	Right/Left	B	B
12	Rogues/Vint Hill	-Unsignalized			
		Vint Hill EB	Through/Right	A	A
		Vint Hill WB	Through/Left	A	A
		Rogues NB	Right/Left	B	B
13	Dumfries/Riley	-Unsignalized			
		Dumfries EB	Left	A	A
		Dumfries EB	Through/Right	A	A
		Dumfries WB	Through/Left	A	A
		Dumfries WB	Right	A	A
		Riley NB	Right/Through/Left	D	A
		Riley SB	Through/Left	C	C
		Riley SB	Right	A	A
14	Dumfries/Rogues	-Signalized			
		Rogues WB	Right/Left	B	B
		Dumfries SB	Left	A	A
		Dumfries SB	Through	A	A
		Dumfries NB	Through/Right	B	B
15	Kennedy/Rogues	-Unsignalized			
		Kennedy EB	Right/Left	B	B
		Rogues NB	Through/Left	A	A
		Rogues SB	Through/Right	A	A
16	Rogues/Watson	-Unsignalized			
		Rogues EB	Left	A	A
		Rogues EB	Through	A	A
		Rogues WB	Through	A	A
		Rogues WB	Right	A	A
		Watson SB	Left	B	B
		Watson SB	Right	A	B

Intersection #1 – US 15 / 29 and Dumfries Road (Signalized)
The Dumfries Road approach currently includes an exclusive left turn lane, a shared through and left turn lane and an exclusive right turn lane. The signal operates in a split phase operation - one side street approach is given a protected phase for all movements to go, then the other side street movement is given a protected phase for all movements to go. This phasing is typically less efficient than a more standard phasing, but is often used to provide more capacity for a heavy left turn movement. At this location, the Dumfries Road approach includes a very high westbound left turn volume during the PM peak hour. The split phasing allows the use of the additional "left and through shared lane" to increase the capacity of this movement. However, during the PM peak hour this movement still operates at LOS E. Providing dual left turn lanes, a shared through and right turn lane, along with concurrent side street signal phasing would result in all movements operating at LOS D or better.

Intersection #2 – US 15 / 29 and Baldwin Street (Not Signalized)
While the side street volumes are low at this intersection, there is excessive delay resulting from the lack of mainline gaps during both the AM and PM peak hours. The only potential mitigation measures are to signalize this intersection (although it is unlikely that the traffic volumes at this intersection will meet the standard signalization warrants) or to prohibit left turns from the side street thus creating the need for downstream u-turn maneuvers.

Intersection #3 – US 15 / 29 and Grays Mill Road (Not Signalized)
This is the same issue as Intersection #2 – there are very low side street volumes, but there is excessive delay resulting from the lack of mainline gaps during both the AM and PM peak hours. Again, it is unlikely that the traffic volumes at this intersection will meet the standard signalization warrants. Therefore, the only potential mitigation measure is to prohibit left turns from the side street (creating the need for downstream u-turn maneuvers).

Intersection #4 – US 15 / 29 and Broad Run Church Road (Signalized)
This intersection currently has two individual movements that operate at LOS E during the PM peak hour – the westbound through movement and the northbound left turn movement. The signal operates in a split phase operation - one side street approach is given a protected phase for all movements to go, then the other side street movement is given a protected phase for all movements to go. Both of the side street approaches include an exclusive left turn lane and a shared thru and right lane. The westbound through volume is extremely high during the PM peak hour – over 1,800 vehicles per hour with only two through lanes. Ultimately this issue will require additional mainline capacity. An interim solution is to restripe the northbound approach to include an exclusive left turn lane and a shared left / through / right lane. Given that the signal is already utilizing a split phase operation, the signal phasing is appropriate for this striping. This scenario will improve the westbound mainline (Route 29 SB) level of service to LOS D but the northbound movement (Route 600) is still expected to operate at LOS E.

Intersection #5 – US 15 / 29 and Riley Road (Not Signalized)
The operational issue at this intersection is the same as intersections #2 and #3 – although the side street volume is low (less than 10 vph turning left), there is excessive delay resulting from the lack of mainline gaps. Traffic volumes will not meet signalization warrants, therefore the only potential mitigation measure is to prohibit left turns from the side street during peak hours of the day. This would create the need to safely accommodate downstream u-turn maneuvers.

Intersection #6 – US 15/29 and Vint Hill Road (Signalized)

This intersection experiences excessive delay on the mainline due to the high approach volumes. Overall, there is a deficit of available capacity to address the volumes on the mainline, and from Vint Hill Road. Excessive queuing occurs on US 15/29 and there is a well documented history of crashes on the northbound US 15/29 approach due to a combination of the queues and hills in advance of the signal. Potential mitigation is the reconstruction of the intersection to a “Green T” configuration that would allow the southbound (westbound for the purpose of this document) approach to flow freely through the intersection. Figure 15 provides an illustration of this concept. The longer term solution is to grade separate the intersection. However, there are constraints resulting from historical resources and proximity to the battlefields that result in this location being difficult to re-construct.

Existing Link Traffic Volumes

The following **Figure 5** illustrates the existing PM peak hour road network traffic volumes for the major roads within the service district. The travel demand model has the ability to output link level of service findings using a color coded scheme whereby orange indicates a near capacity condition and red indicates over capacity. The following **Figure 6** illustrates link level of service / capacity concerns for the PM peak hours of the day for the study network. The AM peak period volumes are generally the reciprocal of the PM peak period volumes, thus we should expect to see similar capacity concerns along the same links in the AM peak hour of the day.

Figure 5: New Baltimore Service District Existing PM Peak Link Volumes (2011)

Figure 6: New Baltimore Service District Existing PM Peak Link Level of Service (2011)

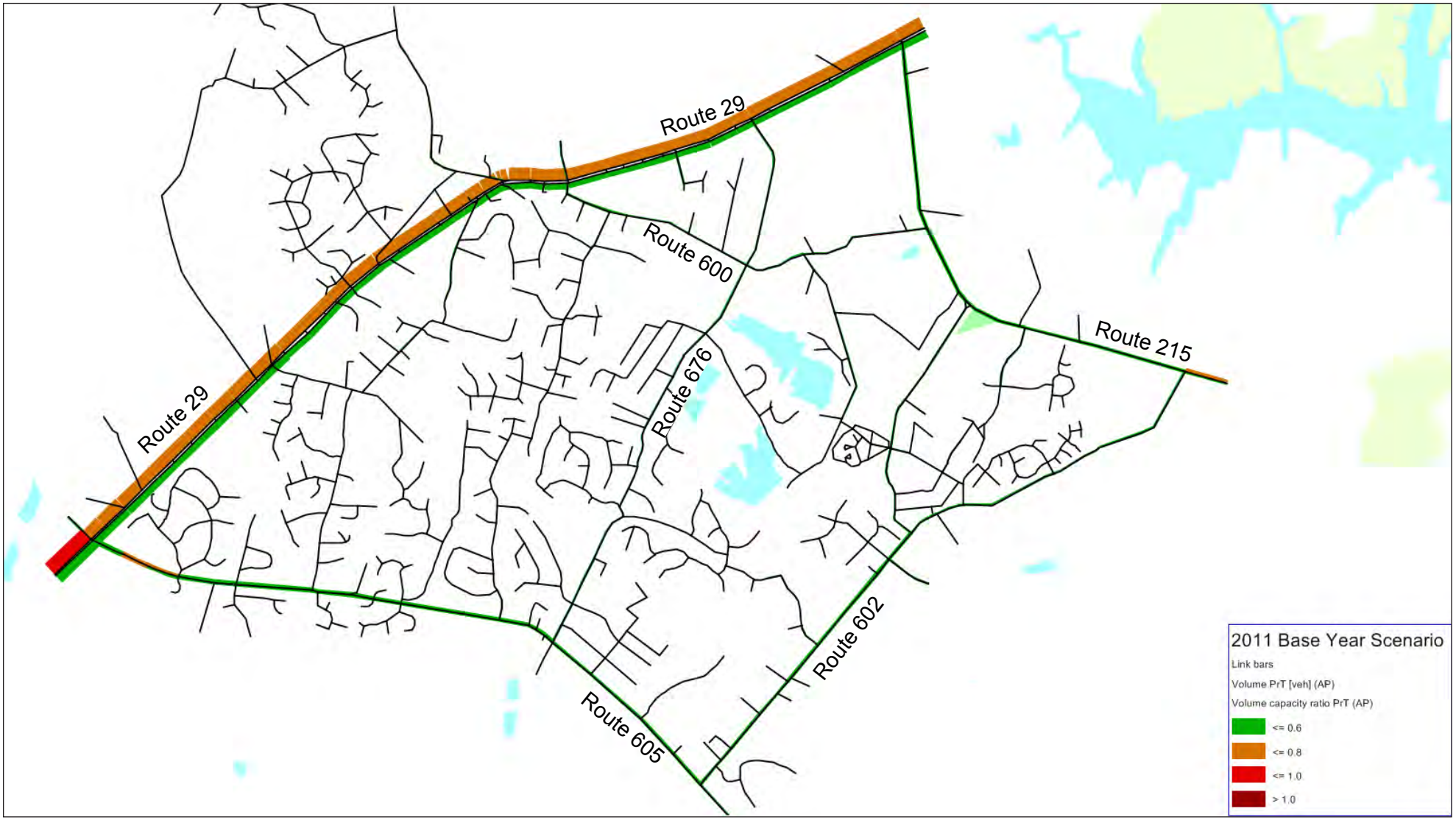

Future Conditions Analysis

An analysis of expected future traffic conditions was developed as needed to ascertain the future intersection and road segment conditions and concerns. The basis for the future travel conditions was the output from the service district travel demand model. As part of the travel demand modeling process, alternative scenarios were considered for future road network modifications and expansions. The alternatives included the existing plus committed (E+C) network, which includes new connections and road extensions that are currently planned. The E+C network is illustrated in the following **Figure 7**. Additional potential network modifications were identified through the study process and in coordination with the service district planning committee. The additional potential improvements included:

1. Closing the Route 600/Route 29 median crossover

2. Modifying the Route 600 alignment from the north to intersect Route 29 at what has been called the “Cross Creek Connector”. This intersection would be a roundabout type configuration and allow full turning movements on all approaches.

3. Construction of a roundabout at Riley Road/Route 29

4. Modification of the Route 215 and Route 29 intersection to allow for a free flow southbound movement and improve capacity for turns to/from Route 29

5. New road connection between Riley Road/Route 600 vicinity to Kennedy Road. This alignment would also disconnect Route 600 from a direction connection to Riley Road and create a new intersection for that link of Route 600 with the new road segment.

6. Connection of Grapewood Drive to Lake Drive

Additional scenarios with variations in the road network per the six potential improvements were coded into the travel demand model and the impacts were examined. The Alternative 1 scenario included potential improvements 1 through 4, and an Alternative 2 scenario included potential improvements 1 through 5. The Grapewood Drive extension was coded into the model as a standalone test to see what volume of traffic we might expect to see if this connection was made. It appears from the modeling test that the future volume on this newly connected link would be around 800 vehicles per day, or about 80 vehicles in the peak hour of the day.

In consideration of the Alternative 1 and 2 scenarios, traffic turning movements were projected for the sixteen study intersections and re-analyzed with the new volume set. The new volume set is shown in the following **Figure 8**. PM peak hour link volumes are shown in **Figure 9**.

Figure 7: New Baltimore Service District Future E+C Road Network

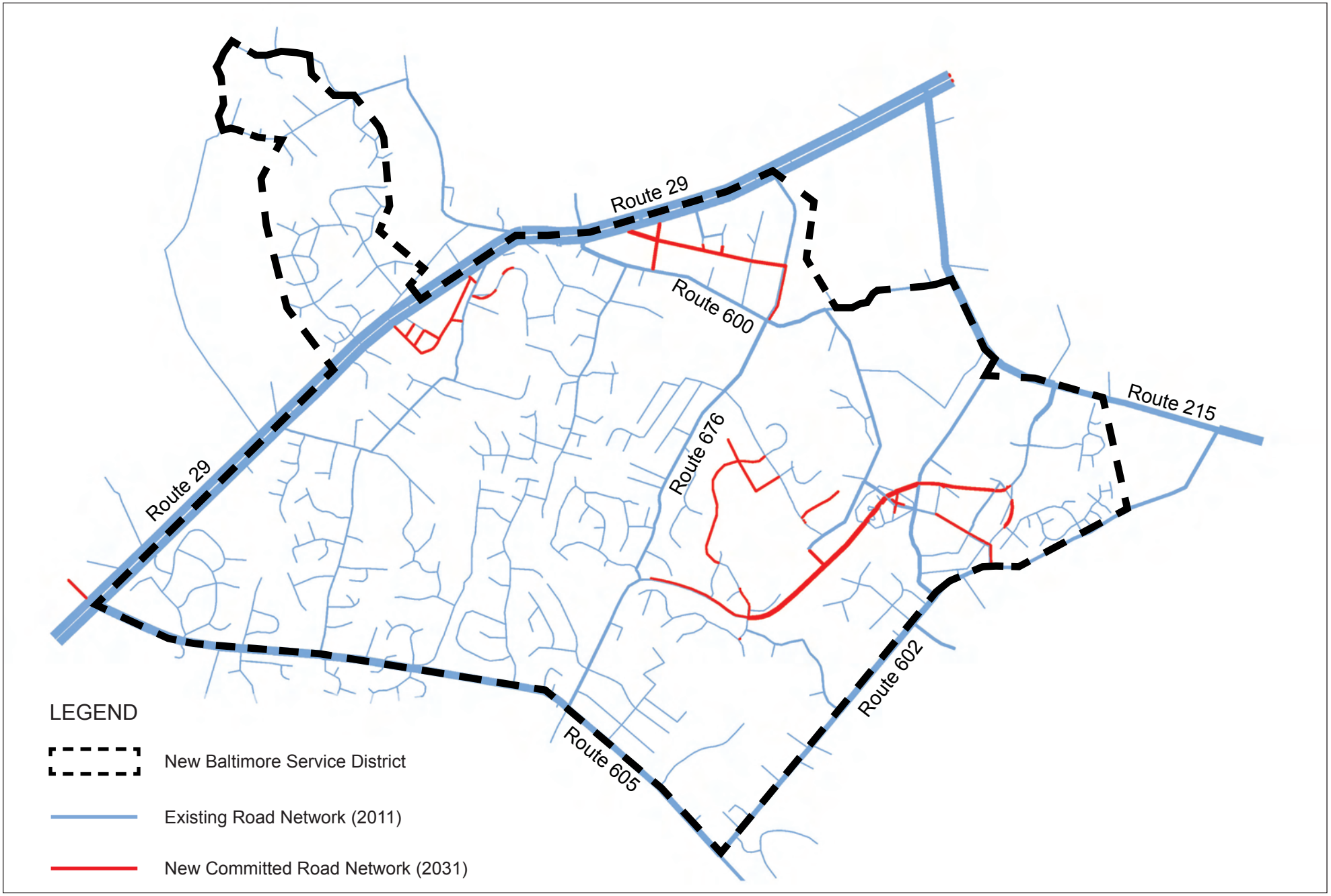

Figure 8: New Baltimore Service District Future Intersection Volumes (2031)

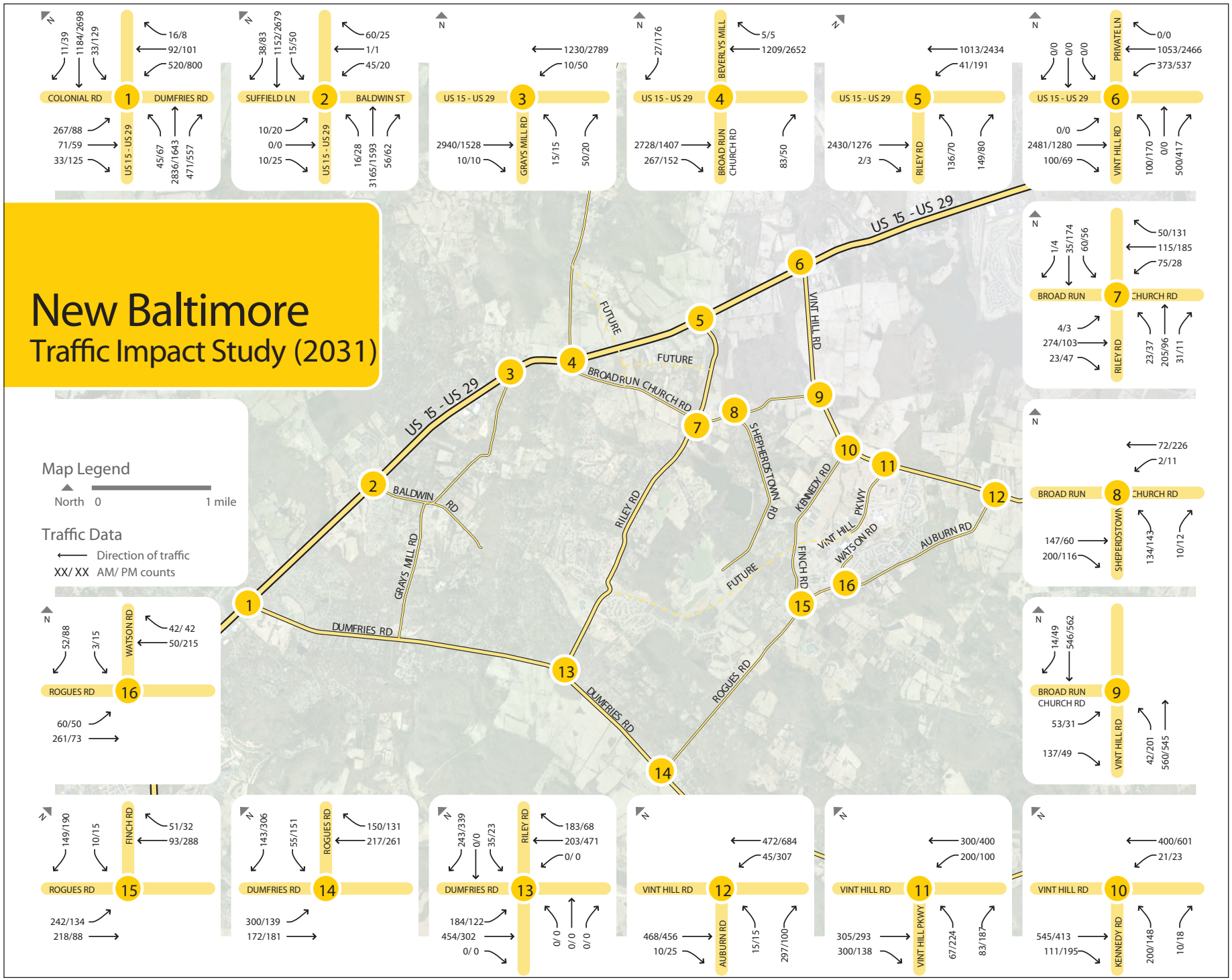

Figure 9: New Baltimore Service District Future PM Peak Link Volumes (2031)

The sixteen study intersections were analyzed using the future volumes. Each intersection was analyzed under its current geometry, and then a mitigated scenario was also identified and analyzed. The mitigation included the roundabouts along Route 29 and also at the Route 676/600 (Riley/Broad Run Church Road), signalization of certain intersections, and changes to laneages at certain intersections. The following **Tables 3 and 4** provide a summary of the future intersection operations under existing geometry and mitigated conditions.

The Synchro traffic operational model was again run to identify the changes in future level of service at the sixteen analysis intersection. The results of the analyses are shown in the following **Tables 3 and 4**.

Table 3: New Baltimore Service District Future Delay and LOS (2031)

No.	Intersection			2031 AM LOS	2031 PM LOS
1	Route 29/Dumfries Roac	-Signalized		F	F
		Dumfries EB	Through/Left	F	E
		Dumfries EB	Right	D	D
		Dumfries WB	Left	F	F
		Dumfries WB	Through/Left	F	F
		Dumfries WB	Right	D	D
		Route 29 NB	Left	D	E
		Route 29 NB	Through	F	D
		Route 29 NB	Right	C	C
		Route 29 SB	Left	E	F
		Route 29 SB	Through	C	F
		Route 29 SB	Right	B	C
2	Route 29/Baldwin	-Unsignalized			
		Suffield EB	Right/Through/Lef	F	F
		Baldwin WB	Right/Through/Lef	F	F
		Route 29 NB	Left	B	E
		Route 29 NB	Through	A	A
		Route 29 NB	Right	A	A
		Route 29 SB	Left	F	C
		Route 29 SB	Through	A	A
		Route 29 SB	Right	A	A
3	Route 29/Grays Mill	-Unsignalized			
		Route 29 EB	Through	A	A
		Route 29 EB	Right	A	A
		Route 29 WB	Left	E	C
		Route 29 WB	Through	A	A
		Grays Mill NB	Right/Left	F	F
4	Route 29/Broad Run	-Unsignalized/Sideroad Right In/Out			
		Route 29 EB	Left	-	-
		Route 29 EB	Through	A	A
		Route 29 EB	Right	A	A
		Route 29 WB	Left	-	-
		Route 29 WB	Through	A	A
		Route 29 WB	Right	A	A
		Broad Run NB	Left	-	-
		Broad Run NB	Right	F	C
		Broad Run SB	Left	-	-
		Broad Run SB	Right	B	F
5	Route 29/Riley	-Unsignalized			
		Route 29 EB	Through	A	A
		Route 29 EB	Right	A	A
		Route 29 WB	Left	E	C
		Route 29 WB	Through	A	A
		Riley NB	Left	F	F
		Riley NB	Right	F	C
6	Route 29/Vint Hill	-Signalized		F	F
		Route 29 EB	Through	F	C
		Route 29 EB	Right	B	B
		Route 29 WB	Left	F	F
		Route 29 WB	Through	A	D
		Route 29 WB	Right	A	A
		Vint Hill NB	Through/Left	F	F
		Vint Hill NB	Right	F	F
		Vint Hill SB	Right/Through/Lef	A	A
7	Broad Run/Riley	-Unsignalized			
		Broad Run EB	Through/Left	A	A
		Broad Run EB	Right	A	A
		Broad Run WB	Right/Through/Lef	A	A
		Riley NB	Right/Through/Lef	E	C
		Riley SB	Right/Through/Lef	E	C

No.	Intersection			2031 AM LOS	2031 PM LOS
8	Broad Run/Shepherdstown	-Unsignalized			
		Broad Run EB	Through/Right	A	A
		Broad Run WB	Through/Left	A	A
		Shepherdstown NB	Right/Left	B	B
9	Broad Run/Vint Hill	-Unsignalized			
		Broad Run EB	Right/Left	D	E
		Vint Hill NB	Through/Left	A	A
		Vint Hill SB	Through/Right	A	A
10	Kennedy/Vint Hill	-Unsignalized			
		Vint Hill EB	Through	A	A
		Vint Hill EB	Right	A	A
		Kennedy NB	Left	F	F
		Kennedy NB	Right	A	A
		Vint Hill WB	Left	A	A
		Vint Hill WB	Through	A	A
11	Vint Hill Pkwy/Vint Hill Rd	-Unsignalized			
		Vint Hill Rd EB	Through	A	A
		Vint Hill Rd EB	Right	A	A
		Vint Hill Rd WB	Left	B	A
		Vint Hill Rd WB	Through	A	A
		Vint Hill Pkwy NB	Right/Left	D	F
12	Rogues/Vint Hill	-Unsignalized			
		Vint Hill EB	Through/Right	A	A
		Vint Hill WB	Through/Left	A	A
		Rogues NB	Right/Left	C	D
13	Dumfries/Riley	-Unsignalized			
		Dumfries EB	Left	A	A
		Dumfries EB	Through/Right	A	A
		Dumfries WB	Through/Left	A	A
		Dumfries WB	Right	A	A
		Riley NB	Right/Through/Left	A	A
		Riley SB	Through/Left	B	C
		Riley SB	Right	A	A
14	Dumfries/Rogues	-Signalized			
		Rogues WB	Right/Left	B	D
		Dumfries SB	Left	A	A
		Dumfries SB	Through	A	A
		Dumfries NB	Through/Right	B	B
15	Kennedy/Rogues	-Unsignalized			
		Kennedy EB	Right/Left	B	B
		Rogues NB	Through/Left	A	A
		Rogues SB	Through/Right	A	A
16	Rogues/Watson	-Unsignalized			
		Rogues EB	Left	A	A
		Rogues EB	Through	A	A
		Rogues WB	Through	A	A
		Rogues WB	Right	A	A
		Watson SB	Left	B	B
		Watson SB	Right	A	B

Table 4: New Baltimore Service District Future with Mitigations Delay and LOS (2031)

No.	Intersection			2031 AM MITIGATED LOS	2031 PM MITIGATED LOS
1	Route 29/Dumfries Road	-Signalized		E	F
		Dumfries EB	Left	F	E
		Dumfries EB	Through	F	F
		Dumfries EB	Right	E	F
		Dumfries WB	Left	F	F
		Dumfries WB	Through/Left	F	D
		Dumfries WB	Right	E	D
		Route 29 NB	Left	F	F
		Route 29 NB	Through	E	D
		Route 29 NB	Right	B	C
		Route 29 SB	Left	E	F
		Route 29 SB	Through	B	F
		Route 29 SB	Right	B	B
2	Route 29/Baldwin	-Unsignalized: add WB & EB right turn lanes			
		Suffield EB	Through/Left	F	F
		Suffield EB	Right	A	A
		Baldwin WB	Through/Left	F	F
		Baldwin WB	Right	A	A
		Route 29 NB	Left	B	E
		Route 29 NB	Through	A	A
		Route 29 NB	Right	A	A
		Route 29 SB	Left	F	C
		Route 29 SB	Through	A	A
		Route 29 SB	Right	A	A
3	Route 29/Grays Mill	-Unsignalized: add NB right turn lanes			
		Route 29 EB	Through	A	A
		Route 29 EB	Right	A	A
		Route 29 WB	Left	E	C
		Route 29 WB	Through	A	A
		Grays Mill NB	Left	F	F
		Grays Mill NB	Right	A	A
4	Route 29/Broad Run	-Unsignalized			
		Route 29 EB	Left	-	-
		Route 29 EB	Through	A	A
		Route 29 EB	Right	A	A
		Route 29 WB	Left	-	-
		Route 29 WB	Through	A	A
		Route 29 WB	Right	A	A
		Broad Run NB	Left	-	-
		Broad Run NB	Right	F	C
		Broad Run SB	Left	-	-
		Broad Run SB	Right	B	F
5	Route 29/Riley	-Roundabout		See Note	
		Route 29 EB	Through		
		Route 29 EB	Right		
		Route 29 WB	Left		
		Route 29 WB	Through		
		Riley NB	Left		
		Riley NB	Right		
6	Route 29/Vint Hill	-Signalized		F	E
		Route 29 EB	Through	F	D
		Route 29 EB	Right	B	C
		Route 29 WB	Left	F	F
		Route 29 WB	Through	A	A
		Route 29 WB	Right	A	A
		Vint Hill NB	Left	D	F
		Vint Hill NB	Through	-	-
		Vint Hill NB	Right	F	F
		Vint Hill SB	Right	A	A
		Vint Hill SB	Through/Left	-	-
7	Broad Run/Riley	-Roundabout			
		Broad Run EB	Through/Left		
		Broad Run EB	Right		
		Broad Run WB	Right/Through/Left		
		Riley NB	Right/Through/Left		
		Riley SB	Right/Through/Left		

No.	Intersection			2031 AM MITIGATED LOS	2031 PM MITIGATED LOS
8	Broad Run/Shepherdstown	-Unsignalized: add EB right turn lane			
		Broad Run EB	Through	A	A
		Broad Run EB	Right	A	A
		Broad Run WB	Through/Left	A	A
		Shepherdstown NB	Right/Left	B	B
9	Broad Run/Vint Hill	-Unsignalized: add SB right turn lane & NB left turn lane			
		Broad Run EB	Right/Left	D	E
		Vint Hill NB	Left	A	B
		Vint Hill NB	Through	A	A
		Vint Hill SB	Through	A	A
		Vint Hill SB	Right	A	A
10	Kennedy/Vint Hill	-Signalized			
		Vint Hill EB	Through	C	A
		Vint Hill EB	Right	B	A
		Kennedy NB	Left	C	C
		Kennedy NB	Right	C	C
		Vint Hill WB	Left	D	C
		Vint Hill WB	Through	A	A
11	Vint Hill Pkwy/Vint Hill Rd	-Signalized			
		Vint Hill Rd EB	Through	B	B
		Vint Hill Rd EB	Right	A	A
		Vint Hill Rd WB	Left	A	A
		Vint Hill Rd WB	Through	A	A
		Vint Hill Pkwy NB	Right/Left	B	B
12	Rogues/Vint Hill	-Unsignalized: add WB left turn lane			
		Vint Hill EB	Through/Right	A	A
		Vint Hill WB	Left	A	B
		Vint Hill WB	Through	A	A
		Rogues NB	Right/Left	C	D
13	Dumfries/Riley	-Signalized			
		Dumfries EB	Left	A	A
		Dumfries EB	Through	A	A
		Dumfries WB	Through	A	A
		Dumfries WB	Right	A	A
		Riley SB	Through/Left	B	D
		Riley SB	Right	B	B
14	Dumfries/Rogues	-Signalized			
		Rogues WB	Right/Left	B	D
		Dumfries SB	Left	A	A
		Dumfries SB	Through	A	A
		Dumfries NB	Through/Right	B	B
15	Kennedy/Rogues	-Unsignalized: add NB left turn lane			
		Kennedy EB	Right/Left	B	B
		Rogues NB	Left	A	A
		Rogues NB	Through	A	A
		Rogues SB	Through/Right	A	A
16	Rogues/Watson	-Unsignalized			
		Rogues EB	Left	A	A
		Rogues EB	Through	A	A
		Rogues WB	Through	A	A
		Rogues WB	Right	A	A
		Watson SB	Left	B	B
		Watson SB	Right	A	B

The following provides a discussion of the findings of the future conditions analysis for the intersections.

Intersection #1 – US 15 / 29 and Dumfries Road
At this location, the Dumfries Road approach includes a very high westbound left turn volume during the PM peak hour. With the additional traffic expected based on the traffic demand model, the suggestion to provide dual left turn lanes with a shared through and right turn lane still holds. Doing so would improve the westbound through traffic from a LOS F to an LOS D in both the AM and PM peak hours. This also allows for concurrent side street movements versus the split phased operation that currently exists.

Intersection #2 – US 15 / 29 and Baldwin Street
While the side street volumes remain low in comparison to the heavy traffic on US 15/29 at this intersection. The only potential mitigation measures are to signalize this intersection (although it is unlikely that the traffic volumes at this intersection will be the standard signalization warrants) or to prohibit left turns from the side street thus creating the need for downstream u-turn maneuvers.

Intersection #3 – US 15 / 29 and Grays Mill Road
This intersection has a similar issue as Intersection #2. The side street traffic volumes remain low in the 2031 projection. Signalization might be an option though it is unlikely that the traffic volumes at this intersection will meet the standard signalization warrants. Another alternative could be to add a right turn lane on Greys Mill Road that could improve the right turn to LOS C in the PM.

Intersection #4 – US 15 / 29 and Broad Run Church Road
This intersection is predicted to have two individual movements that operate at LOS F during the PM peak hour – the westbound through movement and the northbound left turn movement. The westbound through volume is extremely high during the PM peak hour – over 1,800 vehicles per hour with only two through lanes. Ultimately this issue will require additional mainline capacity. An interim solution is to restripe the northbound approach to include an exclusive left turn lane and a shared left / through / right lane. Given that the signal is already utilizing a split phase operation, the signal phasing is appropriate for this striping. This scenario will improve the westbound mainline level of service to LOS D but the northbound movement is still expected to operate at LOS E. Longer term, the median crossover will be closed. The Beverley's Mill Road approach (from the north) will be realigned to the northeast to intersection Route 29 across from a new connection that is referred to as the Cross Creek Parkway. This new intersection, envisioned by the County as a roundabout, will provide for full access to/ from Route 29, while the Route 600 intersection with Route 29 will only allow for right-in / out access.

Intersection #6 – US 15 / US 29 & Vint Hill Road
The issue at this intersection is the same as the other US 15/ US 29 intersections because the traffic from the side streets is substantially less than the major road. Because this intersection is already signalized, the only other alternative to improve this case is to construct a Power T intersection. Ignoring the minimal traffic from Private Lane, many aspects of this intersection fail. If a "Power T" intersection were to be employed in this situation, the LOS for the whole intersection would improve to As and Bs.

Intersection #7- Broad Run Church Road & Riley Road
For the future conditions at Riley Road, the County has previously identified and tested a roundabout configuration to improve intersection safety and mitigate the potential future need for a traffic signal. The roundabout will also provide an opportunity to create a gateway treatment.

Intersection #10- Vint Hill Road & Kennedy Road
At this intersection, the sidestreet left turn onto Vint Hill Road will struggle for adequate gaps in traffic. A solution would be to consider signalization at this location. As an alternative, a roundabout could be constructed.

Intersection #11- Vint Hill Road & Vint Hill Parkway
In the future, there should be two approach lanes from Vint Hill Parkway. This will allow for the separation of the right and left turn volumes and will allow the right turns to move without being hindered by the left turn movements.

Intersection #12- Vint Hill Road & Auburn Road
This intersection is adjacent to the service district, though is actually in Prince William County. Due to heavy commute volumes using Rogues Road, additional intersection control or laneage additions maybe needed at this location. Fauquier County should coordinate with Prince William County as continued growth in traffic begins to adversely affect intersection operations.

Intersection #13- Dumfries Road & Riley Road
Signalization of this intersection has been anticipated for the past several years. The intersection should be monitored in the future relative to volume growth and traffic signal warrant and full signalization implemented at the appropriate time.

Intersection #14- Dumfries Road & Rogues Road
The issue with this intersection is that the LOS for Dumfries through traffic is rated at an F. A mitigation method for this situation would be to add a right turn lane to the Dumfries Road approach that could improve the intersection to an LOS A

Future Link Traffic Volume Projections

A comparison was made between the existing traffic volumes along various road links in the service district, and the projected model output volumes. Overall, we see modest growth in volumes across the network. In sum, it appears that across the service district traffic will increase at approximately 1.5% per year. Critical road lengths, in terms of links that will approach volumes that may require adding capacity (i.e. lanes), include Route 215 and Route 605. However, per the projected volumes it appears that the addition of new lanes can likely be avoided by creating safe and efficient intersections along these links of roads. Along a link of roadway, the major intersections generally govern corridor capacity. In simple terms, when the road is flowing at or near capacity, it is important to not have bottlenecks (i.e. under capacity intersections) along the corridor. The following Table X provides a summary of model volumes for representative road links throughout the service district.

Table 5: New Baltimore Service District 2031 Link Traffic Volumes Projection

NEW BALTIMORE SERVICE DISTRICT- Project Link Volumes							
Traffic Projections	**2031 Base**	**2031 E+C**	**2031 Alt.**	**2011**	**2031 Base**	**2031 E+C**	**2031 Alt.**
Spot Location	**2-way PM**	**2-way PM**	**2-way PM**	**ADT**	**ADT**	**ADT**	**ADT**
Brookside new sect. mid-way	0	566	575	0	0	7075	7188
Kennedy Rd. S. of Vint Hill Rd.	386	370	375	3263	4825	4625	4688
Old Alexandria Turnpike S. of Georgetown Rd.	129	169	240	513	1613	2113	3000
Route 29 N. of Baldwin St.	4369	4336	4390	48354	62414	61943	62714
Route 29 N. of Glanamman Way	4602	4561	4560	50415	65743	65157	65143
Route 29 N. of Riley	4167	3971	3980	47277	59529	56729	56857
Route 29 N. of Route 600	4038	3763	3700	45431	57686	53757	52857
Route 29 S. of Riley	4026	3712	3715	45031	57514	53029	53071
Route 215 N. of Rt 600	1281	1160	1170	8500	16013	14500	14625
Route 215 S. of Rt 600	1344	1341	1355	10138	16800	16763	16938
Route 215 E. of Route 602	1548	1548	1545	11900	19350	19350	19313
Route 215 E. of Kennedy Rd.	1156	1037	1055	8475	14450	12963	13188
Rt 600 E. of Rt 29	602	436	195	4000	6670	4831	2161
Route 600 E. of Riley	342	302	305	2225	4275	3775	3813
Route 600 W. of Riley	417	405	370	3438	5213	5063	4625
Route 600 W. of Phoenix Hill Ln	414	411	375	3400	5175	5138	4688
Route 602 N. of Edington Dr.	953	694	720	7913	11913	8675	9000
Route 605 E. of Canter Ln.	980	878	880	8688	12250	10975	11000
Route 605 E. of Route 602	723	723	720	4188	9038	9038	9000
Route 605 S. of Route 29	1463	1465	1495	13113	18288	18313	18688
Route 605 W. of Auburn Mill Rd.	1151	1196	1225	10600	14388	14950	15313
Rt 605 W. of Riley	1151	1203	1230	10450	14388	15038	15375
Route 676 N. of Albrecht Ln.	432	534	540	3575	5400	6675	6750
Route 676 N. of Willow Dr.	348	189	185	3138	4350	2363	2313
Route 676 S. of Route 600	438	379	380	4225	5475	4738	4750
Route 602 Rogues N. of Dumfries	798	706	730	6663	9975	8825	9125
Riley Road N. of Rt 600	417	455	465	3213	5213	5688	5813
Riley Road S. of Rt 600	453	379	395	4313	5663	4738	4938
Shepardstown Rd. S. of Buckminster Ln.	380	301	275	2000	4750	3763	3438
Shepardstown S. of Route 600	382	302	280	2013	4775	3775	3500
Vint Hill Pkwy. S. of Vint Hill Rd.	646	819	845	3213	8075	10238	10563
New Connector Road to Triangle W. of Rt 676 (Riley)	0	295	295	0	0	3688	3688
Rt 675 (Kelly Road) S. of Rt 600	231	236	235	1100	1618	1654	1646
	Comparison of total volume on links:			380758	532825	519936	519763

E+C - Existing plus committed network
Alt 1 - Preferred network (E+C plus additional network changes)

Figure 10: New Baltimore Service District Future PM Peak Link Level of Service (2031)

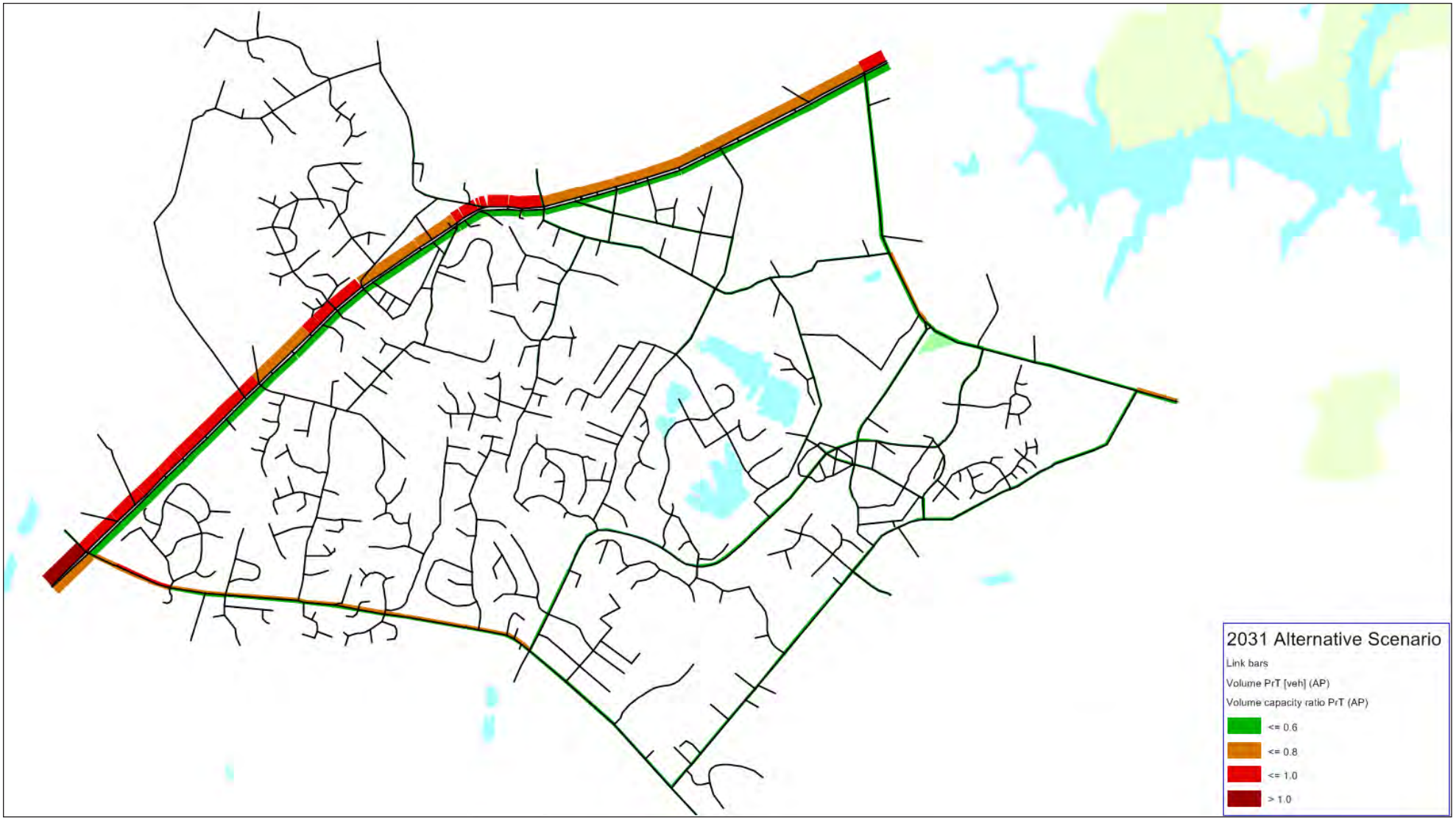

Summary of Projects

Based on the traffic projects developed as part of this traffic study effort, and in consideration of the results of the traffic analyses, the following intersection improvements may be required prior to year 2031.

1. Route 29/Cross Creek Parkway – construct new connection and roundabout intersection on Route 29. Realign Beverley's Mill Road to this new intersection. Also, for the intersection with Route 600, construct a roundabout. (**Figure 12**)
2. Route 29 / Route 600 – upon completion of the above, close the existing median crossover and remove the traffic signal. (**Figure 13**)
3. Route 29/Route 676 – Construct roundabout intersection with Route 29. (**Figure 14**)
4. Route 29 / Route 215 – Re-construct the existing intersection into a "continuous SB 'T' signalized intersection". (**Figure 15**)
5. Route 600/Route 676 – construct roundabout intersection. (**Figure 16**)
6. Route 600/Route 215 – construct left turn lane from Route 215 onto Route 600. (**Figure 17**)
7. Route 605/Route 676 – upgrade existing flashing beacon to full traffic signal
8. Route 29/Route 605 – Construct additional lane on the westbound (Route 605) approach. Modify signal phasing. (**Figure 18**)
9. Route 29/Baldwin Street – construct new right turn lane onto Route 29. Monitor crash history and consider median modifications to prohibit the left from the sidestreets if a crash problem develops. (**Figure 19**)
10. Route 29/Grays Mill Road – look for opportunities to provide access to Telephone Road and Realign Telephone Road with Alexandria Turnpike. If that occurs, the consider closing the median opening at Grays Mill Road. (**Figure 20**)

Sketches of various improvements are provided on the following Figures. (**Figures 11 - 20**)

Other suggestions for improving safety and mobility in the service district include:

1. Construct trails and sidewalks
2. Consider connecting Grapewood Drive to Lake Drive to improve connectivity and access to the schools.
3. Conduct speed studies to check for compatibility of speeds and community context on Rogues Road (Route 602).
4. Conduct crash analyses through the service district to monitor for safety concerns.

Figure 11: Improvement Projects Index

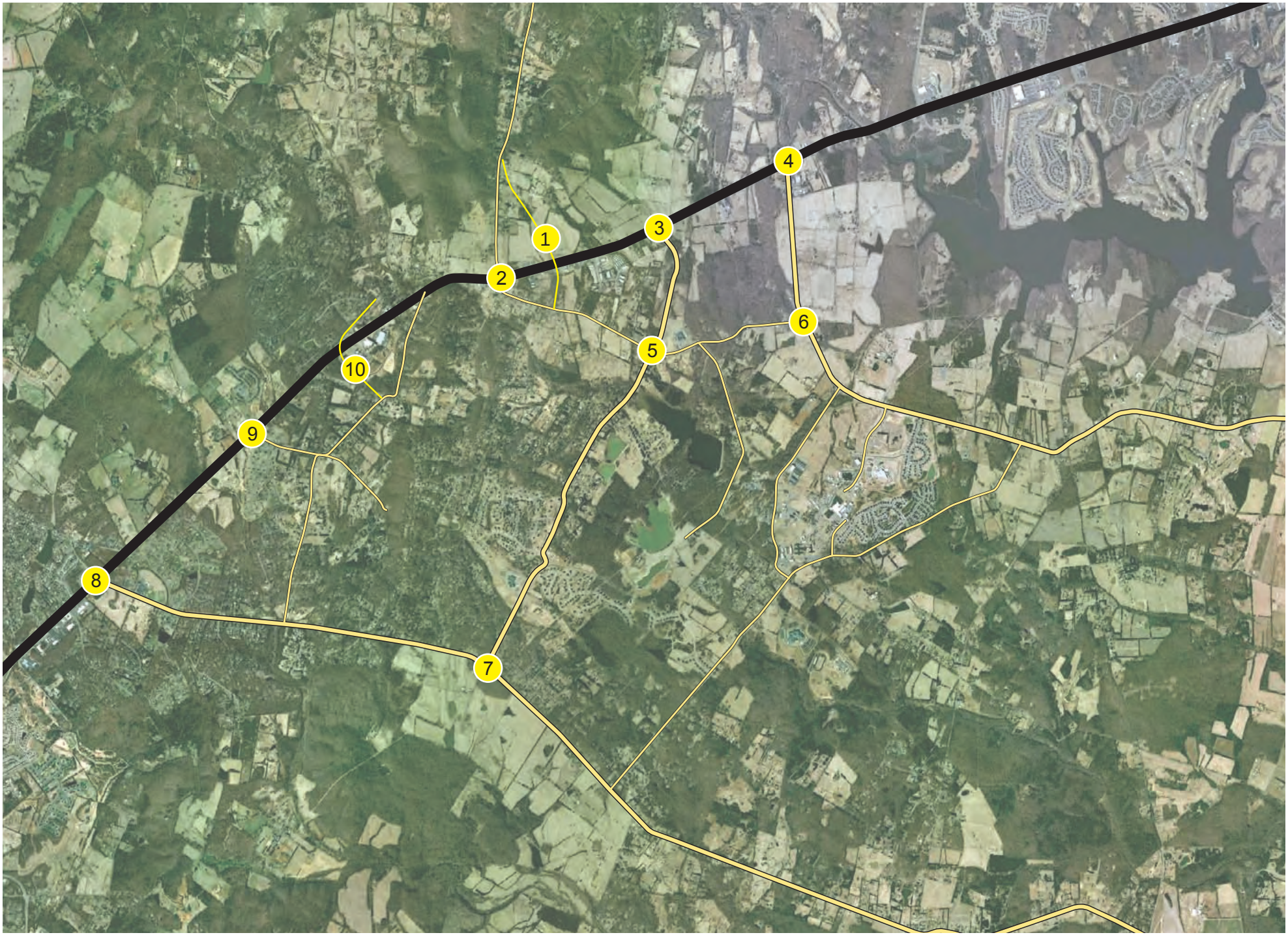

Figure 12: #1 - Route 29 / Cross Creek Parkway

Roadway Improvements

Intersection Improvements: Roundabout (Route 15/29 & Cross Creek Parkway)

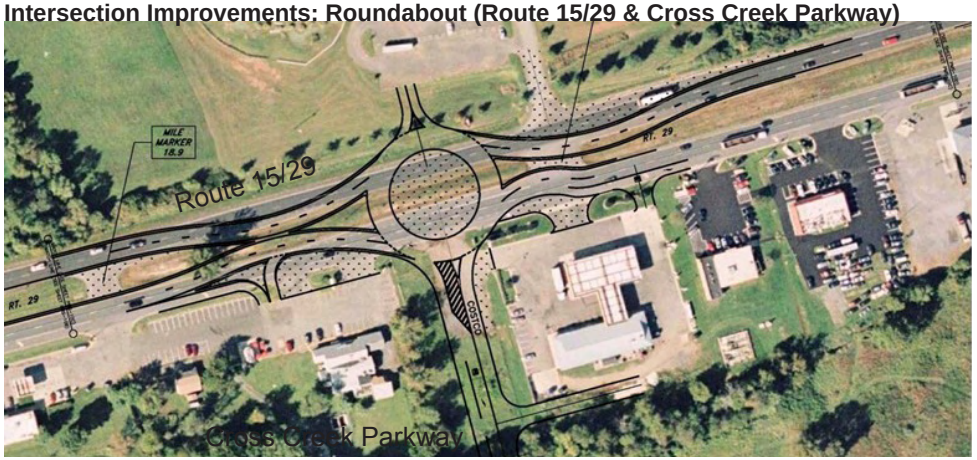

Figure 13: #2 - Route 29 / Route 600

Intersection Improvements: Closing Median

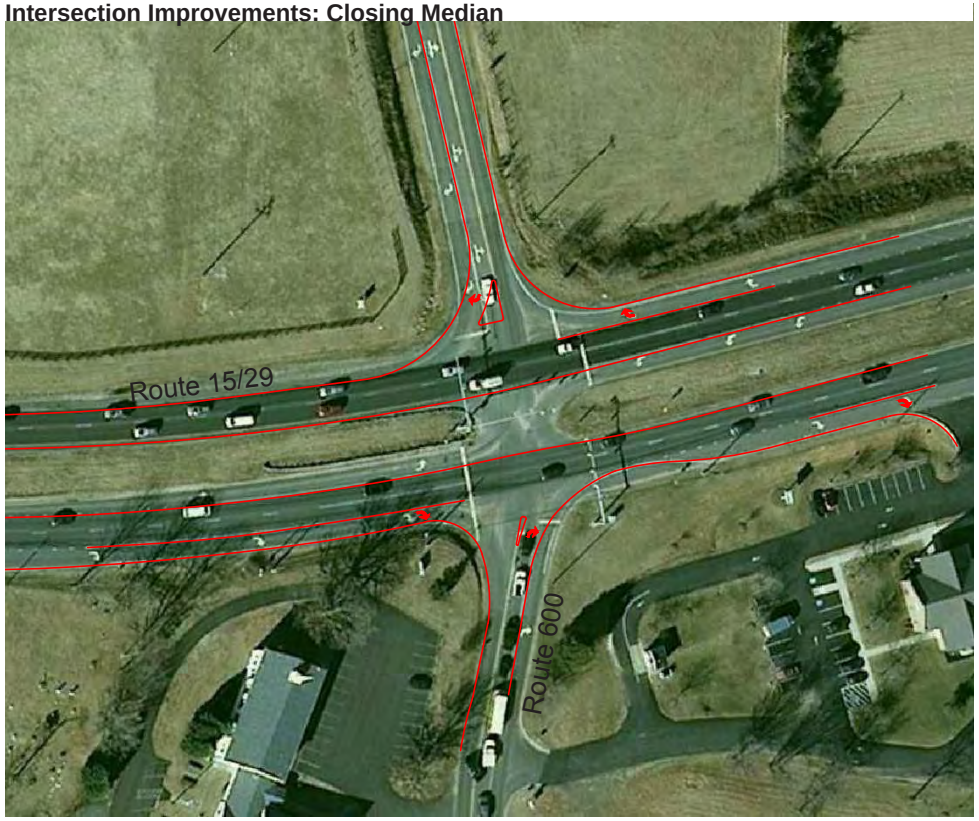

Figure 14: #3 - Route 29 / Route 676

Intersection Improvements: Roundabout

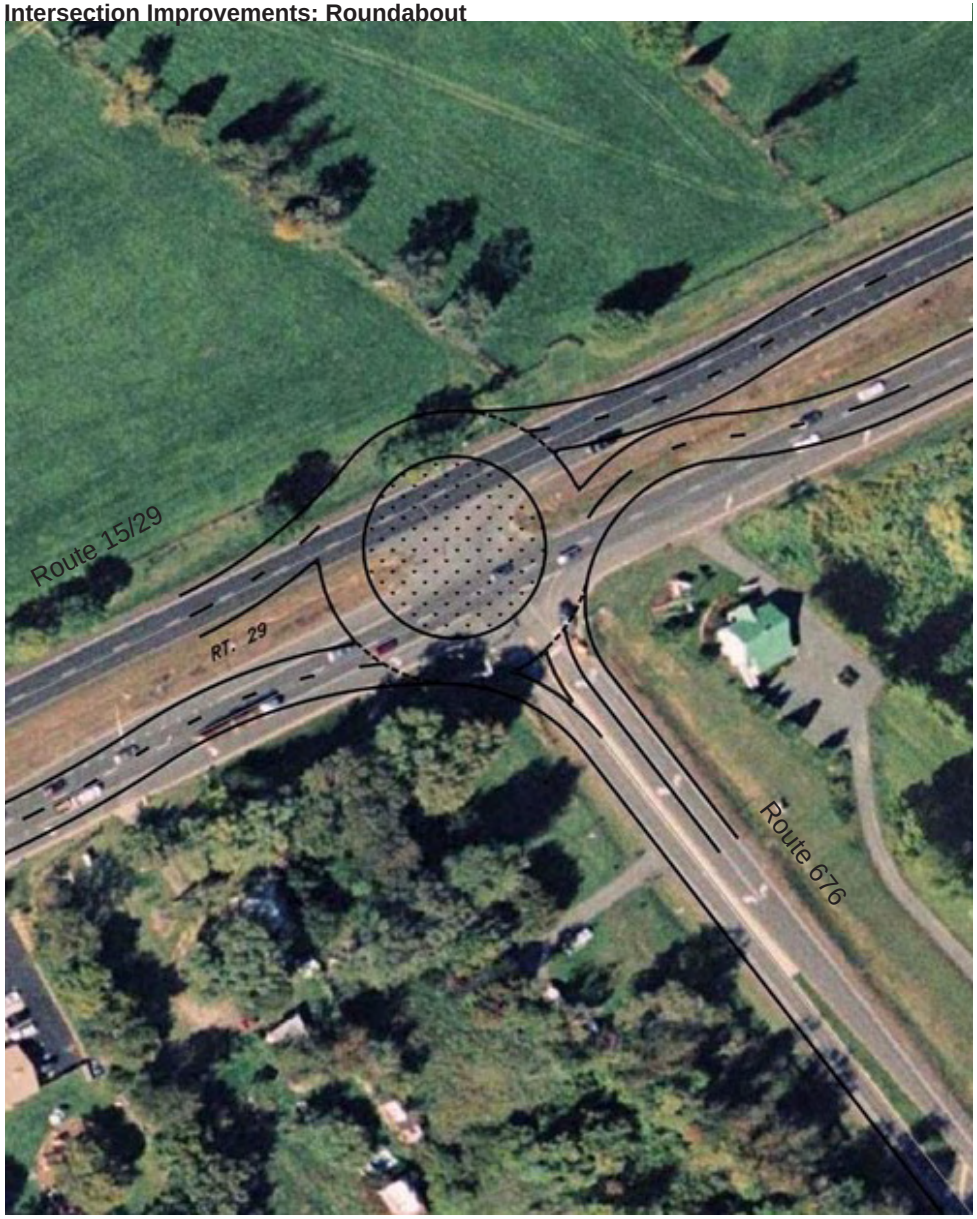

Figure 15: #4 - Route 29 / Route 215

Intersection Improvements: Continuous Green T configuration

Figure 16: #5 - Route 600 / Route 676

Intersection Improvements: Roundabout

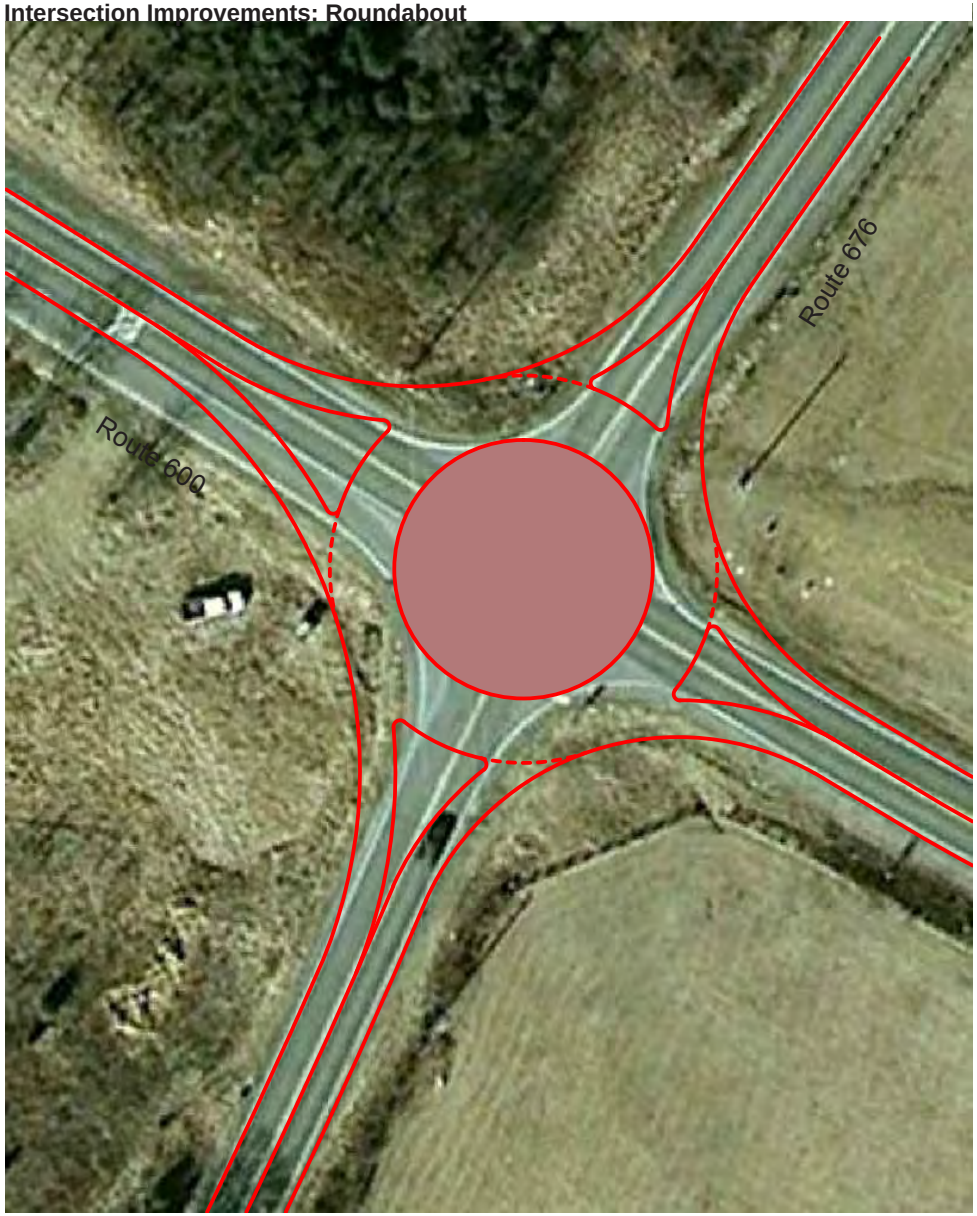

Figure 17: #6 - Route 600 / Route 215

Intersection Improvements: Adding Left Turn Lane

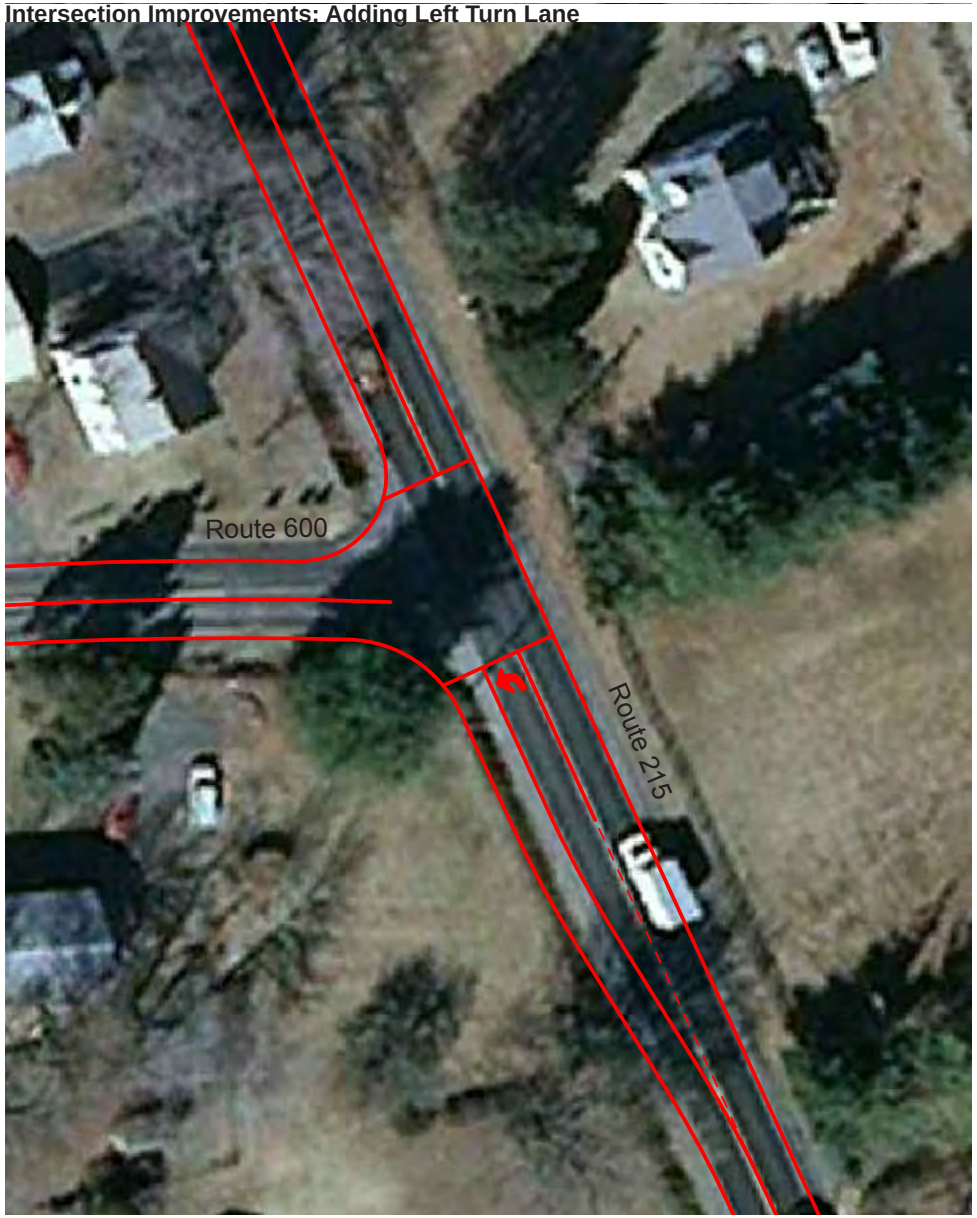

Figure 18: #8 - Route 29 / Route 605

Intersection Improvements: Adding Left Turn Lane

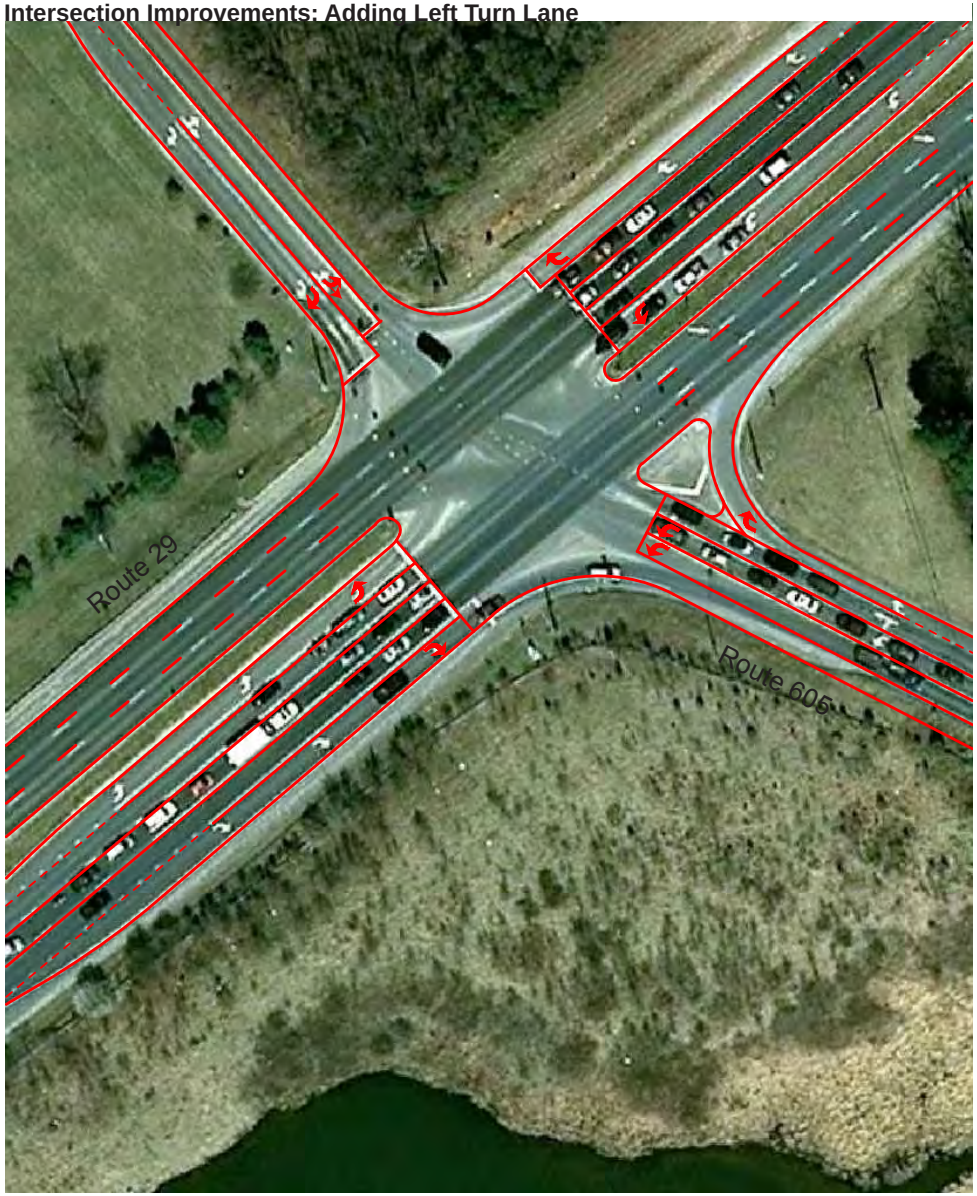

Figure 19: #9 - Route 29 / Baldwin Street

Intersection Improvements: Adding Right Turn Lane

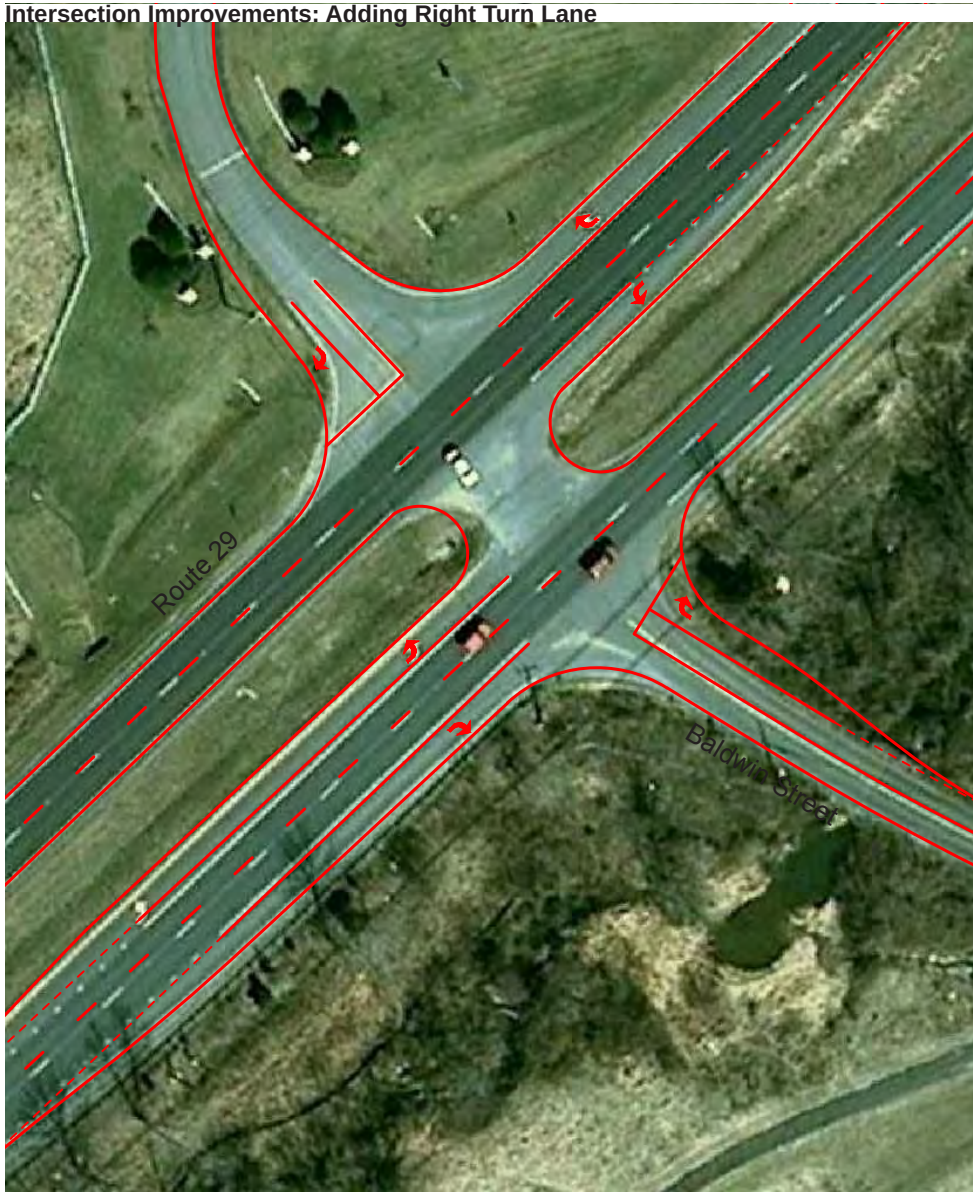

Figure 20: #10 - Route 29 / Grays Mill Road

Roadway Improvements

Appendix A New Baltimore Service District Travel Demand Model Development

TRAVEL DEMAND MODEL DEVELOPMENT

NEW BALTIMORE SERVICE DISTRICT

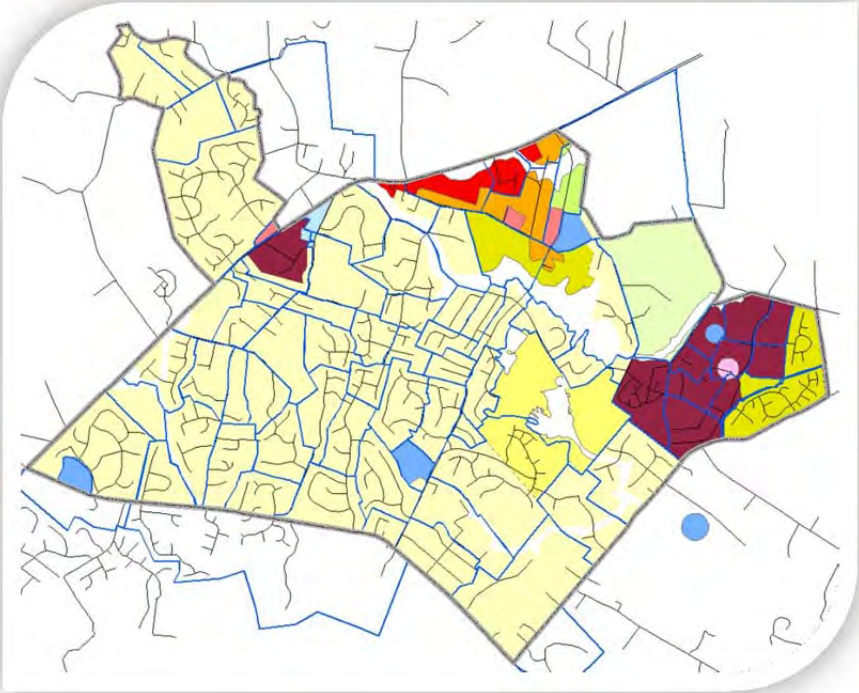

Fauquier County, VA

Submitted to:

Fauquier County

Submitted by:

LOCHNER

LOCHNER

February 7, 2013

TABLE OF CONTENTS

1.0 INTRODUCTION 1
2.0 THE MODELING PROCESS 2
2.1 MODEL AREA IDENTIFICATION 3
2.2 DATA COLLECTION AND CODING 3
2.3 CALIBRATION 4
2.4 MODEL FORECASTS 4
3.0 DEVELOPMENT OF TRAFFIC ANALYSIS ZONES 5
3.1 INTERNAL ZONES 5
3.2 EXTERNAL ZONES 7
4.0 DEMOGRAPHIC AND LAND USE 8
4.1 POPULATION 9
4.2 HOUSEHOLDS 9
4.3 EMPLOYMENT 10
4.4 LAND USE CATEGORIES 12
4.5 BASE YEAR (2011) LAND USE 14
4.6 FUTURE (2031) LAND USE 14
5.0 EXISTING ROADWAY SYSTEM AND BASE YEAR NETWORK MODEL 14
5.1 EXISTING NBSD ROAD NETWORK 15
5.2 FUNCTIONAL CLASSIFICATION 16
5.3 LINK ATTRIBUTES 17
5.4 NODE ATTRIBUTES 21
6.0 TRAVEL MODEL DEVELOPMENT 24
6.1 THREE-STAGE MODEL PROCESS 24
6.3 EXTERNAL TRAVEL 27
6.4 COMMERCIAL VEHICLE TRAVEL 28
6.5 MODEL CALIBRATION AND RESULTS 28
7.0 FORECASTS 31
7.1 FORECAST PROCESS 31
7.2 LAND USE FORECASTS 31
7.3 EXTERNAL GROWTH FORECASTS 31
7.4 FORECAST TRAFFIC VOLUMES 32
7.5 TRANSPORTATION SYSTEM IMPROVEMENTS 32
8.0 CONCLUSIONS 33
APPENDIX 40

LIST OF FIGURES

FIGURE 1: NBSD TRAVEL DEMAND MODELING PROCESS 2
FIGURE 2: MODEL AREA 3
FIGURE 3: NBSD TRAFFIC ANALYSIS ZONES 5
FIGURE 4: NBSD TRAFFIC ANALYSIS ZONES AND LAND USES 6
FIGURE 5: SCHEMATIC REPRESENTATION OF EXTERNAL TRAVEL 7
FIGURE 6: BASE YEAR (BLUE) and FUTURE (RED) NUMBER OF HOUSEHOLDS BY TAZ 10
FIGURE 7: BASE YEAR (2011) INFOGROUP EMPLOYMENT BY TAZ 11
FIGURE 8: NBSD BASE YEAR (2011) NETWORK MODEL 15
FIGURE 9: FUNCTIONAL CLASSIFICATION SYSTEM HIERARCHY 16
FIGURE 10: NBSD ROAD NETWORK MODEL TRAVEL SPEEDS 19
FIGURE 11: BASE YEAR (2011) PM PEAK TURNING MOVEMENTS 20
FIGURE 12: FIELD OBSERVED COUNTS (BLUE) AND VDOT COUNTS (MAROON) 21
FIGURE 13: NBSD CODED INTERSECTION CLASSIFICATION 23
FIGURE 14: MODEL VOLUMES VERSUS OBSERVED TRAFFIC VOLUMES 29
FIGURE 15: BASE YEAR (2011) MODEL VOLUMES 30
FIGURE 16: 20-YEAR TRAFFIC GROWTH AT MAJOR EXTERNAL ZONES 31
FIGURE 17: FUTURE 2031 MODEL VOLUMES ON BASE NETWORK 34
FIGURE 18: FUTURE 2031 COMMITTED NETWORK 35
FIGURE 19: FUTURE 2031 COMMITTED NETWORK + OTHER IMPROVEMENTS (ALTERNATIVE 1) 36
FIGURE 20: FUTURE 2031 MODEL VOLUMES ON ALTERNATIVE 1 NETWORK 37
FIGURE 21: FUTURE 2031 ALTERNATIVE 2 NETWORK 38
FIGURE 22: FUTURE 2031 MODEL VOLUMES ON ALTERNATIVE 2 NETWORK 39

LIST OF TABLES

TABLE 1: EXTERNAL ZONES 8
TABLE 2: VINT HILL DEVELOPMENT NON-RESIDENTIAL SQUARE FOOTAGE 9
TABLE 3: BASE YEAR (2011) VINT HILL DEVELOPMENT NON-RESIDENTIAL SF 12
TABLE 4: NBSD LAND USE CATEGORIES 13
TABLE 5: FUTURE (2031) VINT HILL DEVELOPMENT NON-RESIDENTIAL SF 14
TABLE 6: NBSD LINK TYPES 18
TABLE 7: NODE (INTERSECTION) CLASSIFICATION 22
TABLE 8: TRIP GENERATION RATES 25
TABLE 9: BASE YEAR (2011) TRAFFIC VOLUMES AT EXTERNAL ZONES 28

1.0 INTRODUCTION

Fauquier County has defined nine service districts as depicted on the map to the right. Service districts are designated growth areas planned for the "most intense development in terms of use and density." The stated goal of the Fauquier County Comprehensive Plan is to concentrate and guide growth in and around these districts.

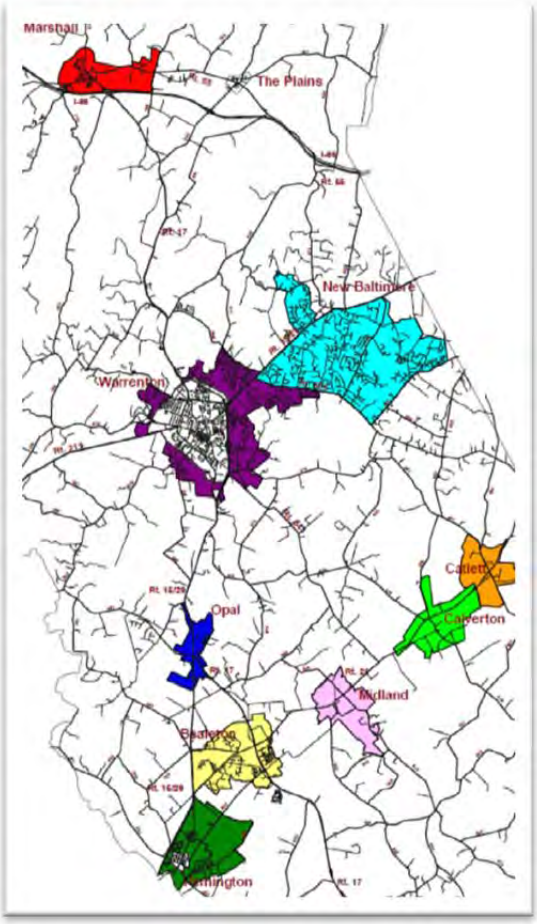

Each service district has a transportation plan that describes the existing and future transportation facilities and level of service operations. Recommended roadway improvement projects to meet future traffic levels are identified.

In developing service district transportation plans, sound estimate of future traffic volumes is one important task. There are several approaches to obtaining such traffic estimates. The simplest method is by using historical data of traffic counts and applying historic growth rates to predict future rates. This is the least costly approach. However, it is less reliable to account for changes in land use activities that affect travel within and outside the service districts. The use of travel demand models accounts for land use and other factors that could impact future traffic in the area. However, development of such models requires investment of time and resources.

The most recent update to the New Baltimore Service District (NBSD) Transportation Plan provides an opportunity to develop a travel demand model that can be used not only during its five-yearly update, but also as a tool for traffic impact analysis. A model that accounts for each developable parcel could be set up so that when a parcel is developed, the model could be updated and the resulting traffic could be estimated.

Fauquier County engaged the services of Engineering & Planning Resources, P.C. in partnership with Lochner to develop a travel demand model for eight of the nine service districts. The Marshall Service district is excluded largely on the basis of its location. Trip interchanges from/to Marshall Service district with the rest of Fauquier County's eight service districts is minimal during the evening peak hour. Thus on a cost-benefit rationale, there is very limited benefit to be gained from including Marshall Service district to justify the cost of building a model that covers the Marshall Service district.

Due to budgetary constraints, as well as data availability, development of County-wide transportation planning model for eight-service districts and areas surrounding them, has been undertaken in two phases. The first phase involves development of a model for the New Baltimore Service District and is the subject of this report. The same model, but for the NBSD, will then extend to include the other seven districts in the second phase.

This technical document provides a summary of the process and the parameters used to develop a transportation planning model for the New Baltimore Service District. The knowledge of the procedure used to develop the model and the forecasts is important for the future application of the model. The NBSD model, for use by Fauquier County staff, is established to assist in the development and evaluation of future transportation improvement projects, as well as forecast traffic volumes for roadways within the NBSD.

2.0 THE MODELING PROCESS

A transportation planning model was constructed with the purpose of forecasting traffic and operating conditions. The model is first calibrated to replicate existing or base-year travel patterns. The model inputs are then modified to represent future conditions, making it possible to project traffic volumes. This gives transportation planners and engineers the ability to determine the impact of different roadway or land use scenarios on the traffic network. This, in turn, allows the professional to evaluate economic decisions on potential capital improvements and then make appropriate plans. One such use of these models is to test several forecast conditions.

Figure 1 provides a schematic representation of the New Baltimore Service District modeling process. Each element of the model process is described in Section 6. Likewise, details of data input, model development, and model results are presented in this technical document.

The NBSD model was developed within the VISUM software package. Details about VISUM are not included in this report. Information about the VISUM software is available at this web site http://www.ptvag.com/software/transportation-planning-traffic-engineering/software-system-solutions/visum/.

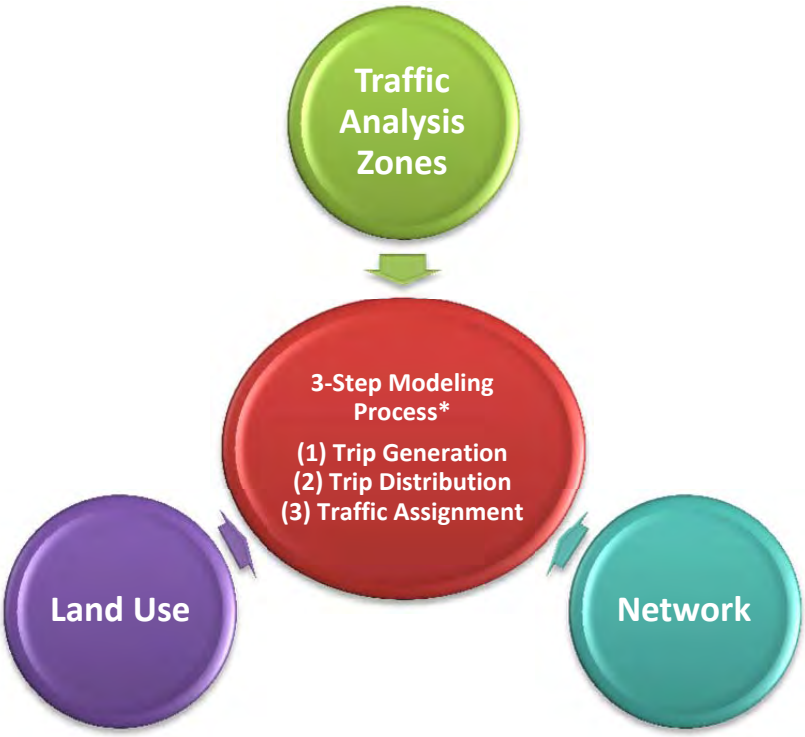

FIGURE 1: NBSD TRAVEL DEMAND MODELING PROCESS

2.1 MODEL AREA IDENTIFICATION

The modeling process begins by determining the area to be modeled. Figure 2 depicts Fauquier County's nine service districts. As mentioned earlier in the introduction, Phase 1 model development only encompasses the NBSD boundary. Once the model boundary is established, the next step is to define the model's zone system--areas or points where trips begin and end. Details of the NBSD zone structure are discussed in Section 3.

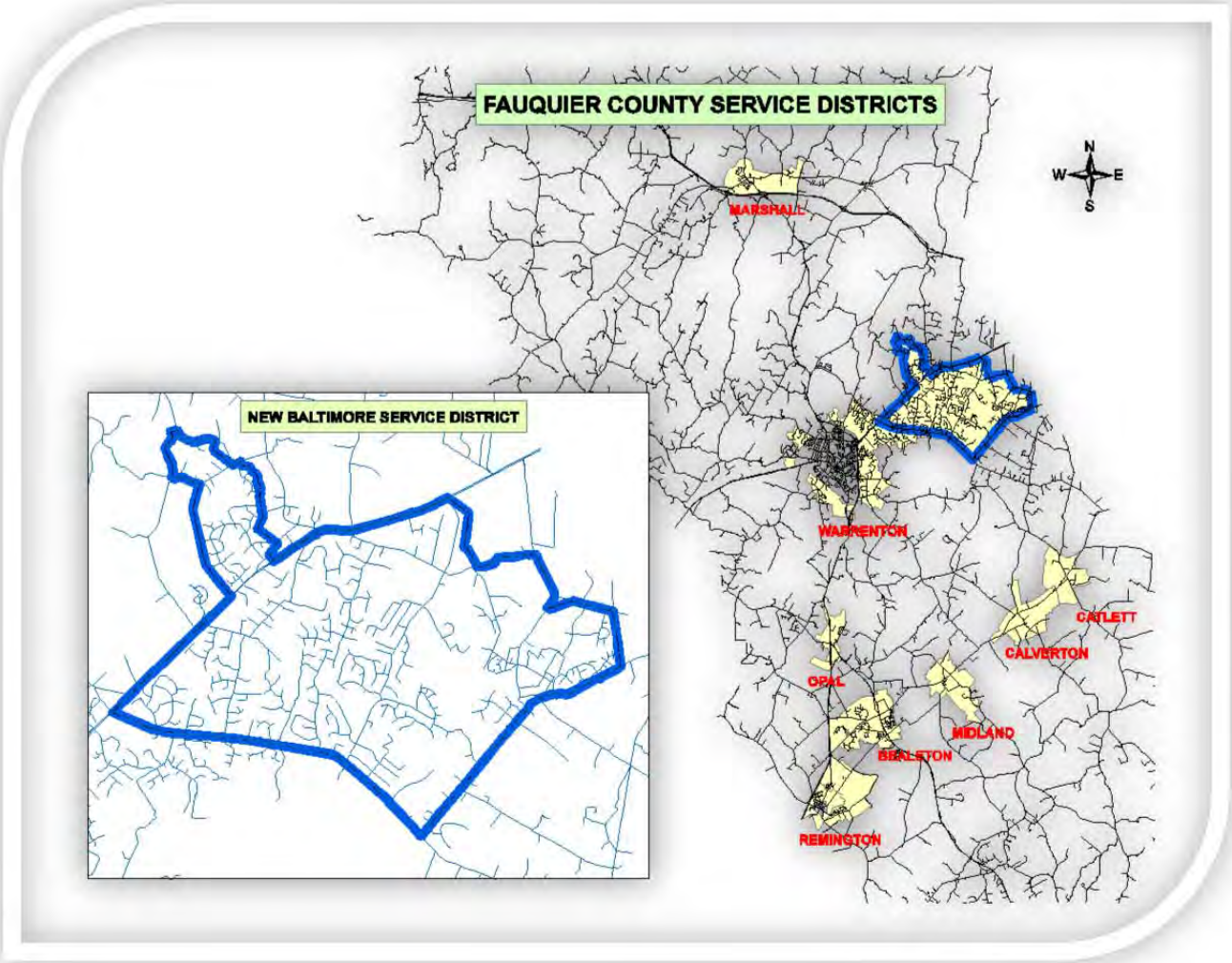

FIGURE 2: MODEL AREA

2.2 DATA COLLECTION AND CODING

After the model area has been identified, the collection and entry of the necessary data to run the modeling program begins. There are two primary components to be entered: network and travel characteristics. The network data include: roadway (link), intersection (node), turn movement penalty, link delay coefficient, and node delay coefficient data. Roadway or link data includes traffic count data for links and turning movements at key intersections. Travel characteristic data includes the land use inventory, trip generation rates, external volume data (volumes entering, exiting, and traveling through the model area), and trip length frequency distributions.

Data collection for the model involves extensive effort and field work. This data collection may include conducting peak-period turning movement counts, origin-destination (OD) surveys, speed-delay travel runs, and other studies used to verify the calibration of the model. OD surveys and speed-delay travel runs were not collected for the NBSD model. Fauquier County and Engineering & Planning Resources staff coordinated most data collection and provided the data to Lochner.

Upon completion of data collection, development of the model's mathematical "rules" began by coding the information and readying it for entry into the VISUM software. Essentially all entered data is numeric. Each entry, such as speed limits for links, capacities for nodes, and collected land use data, is used by the model to estimate network or street volumes. The VISUM program contains many equations and algorithms that help the traffic volume computation process. Therefore, given the amount of data in the transportation planning model, it is advisable to group like data together and assign uniform values. For example, link and node capacities are assumed to be uniform for links and nodes of similar classifications and types throughout the model area. In actual practice, these capacities are considered unique to the location and road conditions. The method for developing these “blanket” values is considered part of the model's rule-building process.

Section 4 describes the land use data input for existing and future planning horizon while Section 5 presents the network model characteristics data.

2.3 CALIBRATION

After all data has been collected, coded, and entered in the VISUM program, the calibration process begins. In this task, the data and the model rules are refined so that the model closely simulates existing travel patterns and volumes on the roadway network. Calibration is performed by conducting a series of simulation runs and evaluating the results. The calibration is considered complete when the results of the simulation runs are statistically similar to the traffic count volumes and other measures of travel behavior.

Section 6 describes the model development and calibration results.

2.4 MODEL FORECASTS

The fourth and final step to modeling is forecasting future travel under different land development growth assumptions and roadway improvement alternatives. With a working calibrated transportation planning model, different land use growth and/ or a future roadway network can be tested to produce forecast traffic. Before the actual forecasts can begin, this question must be raised: Are the rules established in calibration still applicable to future scenarios?

Only professional judgment can answer this question. Most rules that are questioned will involve the roadway characteristic assumptions (speed, capacity, number of lanes, etc.) and do not require any model re-calibration. To complete the forecasts, the appropriate link, node, land use and/or through trip table file is changed by entering the future scenario data.

During forecasts, the true power of the model can be realized. The VISUM software has tools including the screen graphics editor that simplifies the forecast process in entry and review modes. Changes to the model files can be made for several simulation runs using scenario management tool. Further, the results can be represented graphically, on-screen or through a hard-copy plot. Level of service can be analyzed for different forecast scenarios and the implications of improvement strategies can be quantified.

After the forecast evaluation is complete, it is possible to make recommendations for the study area and test each recommendation to analyze its effectiveness on the roadway network. VISUM can compute link volume changes due to modifications in capacity, land uses, roadways, etc. These types of tools are a valuable resource for decision makers and transportation professionals in determining the most effective solutions for mitigating existing and potential roadway congestion.

3.0 DEVELOPMENT OF TRAFFIC ANALYSIS ZONES

Figure 3 depicts the NBSD zone structure. The NBSD model consists of two zone types: internal and external. Internal zones were those zones within the model area. Internal zones have associated land use data that is used to generate origins and destinations. External zones or stations were placed on the roadways entering and leaving the NBSD model boundary. Typically, land use is not associated with external zones; rather the traffic volumes coming in and out of the study area are used to describe the origins and destinations for these external zones. The following sections describe each zonal type.

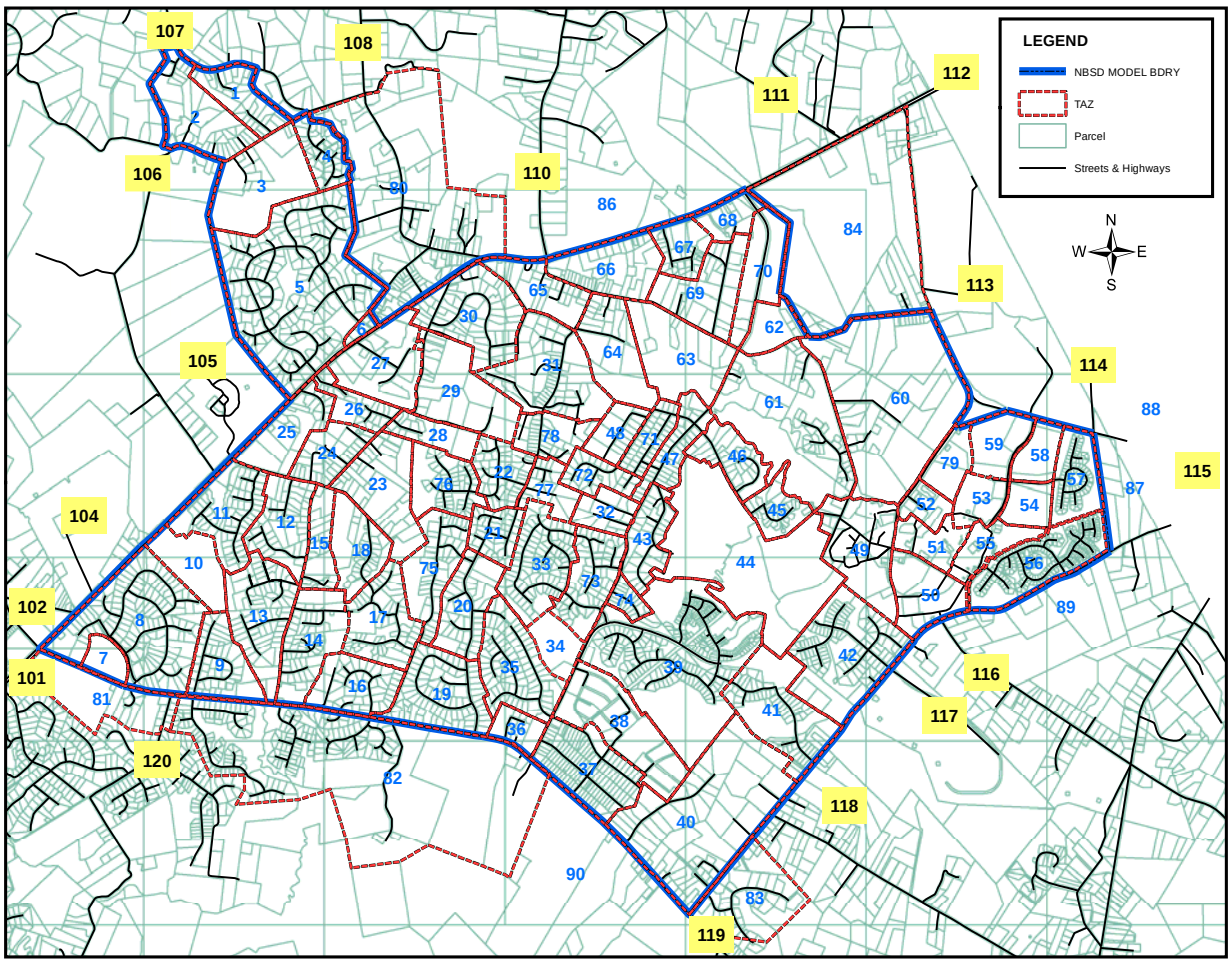

FIGURE 3: NBSD TRAFFIC ANALYSIS ZONES

3.1 INTERNAL ZONES

Internal zones are defined inside the model area boundary. Internal zones can consist of a single parcel, a group of like land uses, or a gathering of local land uses separated by natural, physical, or political boundaries. Several factors are considered to find the best zonal design. The primary factor is related to the results expected of the model. It may be logical to place the zone in a way that groups all land

uses bounded by network roadways. The second factor is how the available land use information is geographically described.

For the NBSD model, the traffic analysis zone (TAZ) was defined following, as much as feasible, along parcel boundaries. This is one important feature of the NBSD model. Having parcels wholly inside a TAZ would make it convenient for future traffic impact analysis should an existing parcel be developed into a different land use. TAZs were also defined to include, as much as feasible, homogenous land uses taking into consideration the defined land use types for the NBSD as demonstrated in Figure 4.

There are a total of 90 internal zones defined, of which 10 were outside of the NBSD boundary. Internal zones are defined as such to be zones that are contained inside the model boundary. Thus, in defining a model area the boundary is generally established where trip interchanges external to the model boundary is minimal, i.e., no direct access, such as driveway access to the roadway along the model boundary. To account for trips that are outside of the NBSD model boundary, for example south of Rogues Road, internal zones were defined.

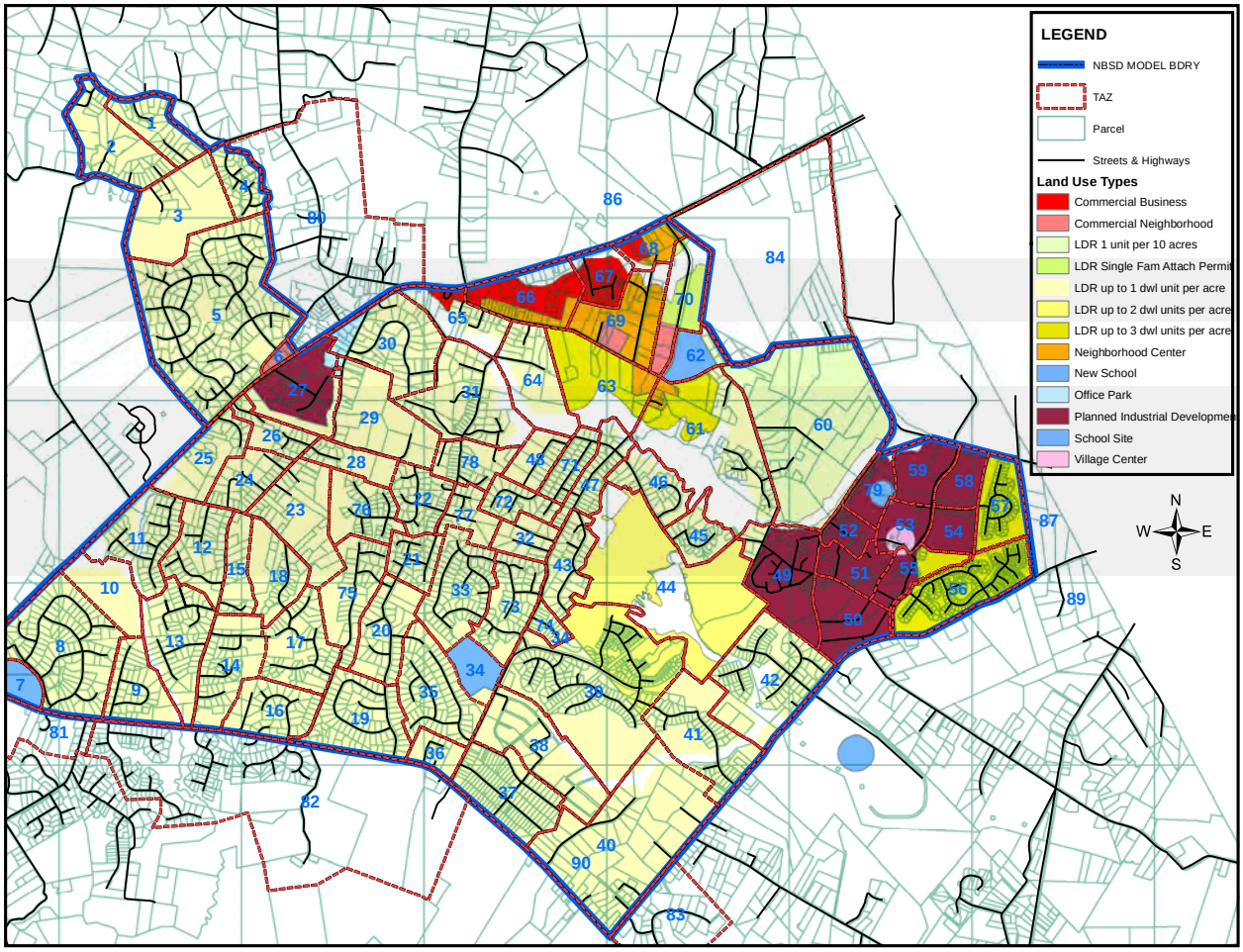

FIGURE 4: NBSD TRAFFIC ANALYSIS ZONES AND LAND USES

3.2 EXTERNAL ZONES

External zones or stations account for all vehicle trips that enter and leave the model area as demonstrated in the schematic representation of external travel in Figure 5. The number of trip ends (productions and attractions in each internal zone) refers only to those trips that begin and end inside the limit of the model area. In many cases, however, trips are not mainly confined inside the perimeter of the model boundary. Depending upon the desired results, it may be logical to place an external zone on each roadway that leaves the network. In other cases, local traffic conditions may establish a need to tie together several exiting roadways into a single zone so that the external destination of the trip can be simulated.

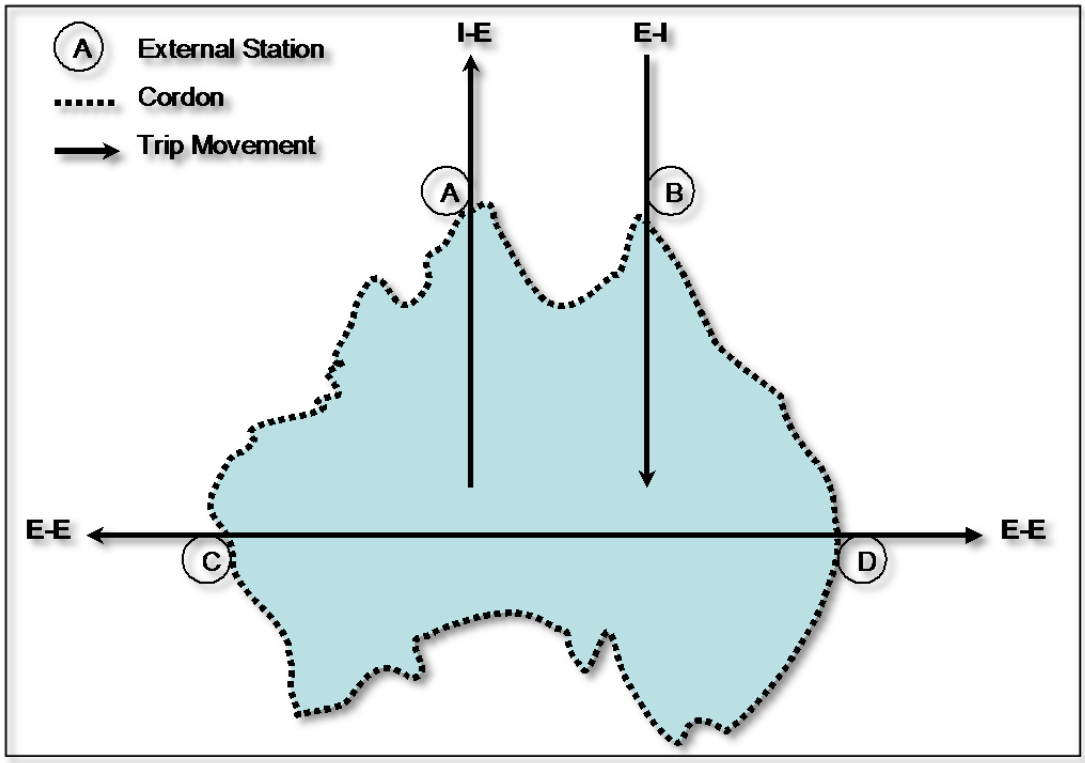

FIGURE 5: SCHEMATIC REPRESENTATION OF EXTERNAL TRAVEL

As Figure 5 shows, external trips can be divided into two categories: 1) external-external trips (E-E), which pass completely through the region or study area without having a trip-end within the region (at stations C and D), and 2) external-internal (E-I or I-E) trips, which have one trip-end within the region and one trip-end outside of the region (at stations A and B). The external-internal trips are incorporated into the regional trip generation model, while the external-external trips are expressed as a separate trip table that is added to the other vehicle trip tables before assignment.

The amount of external travel is heavily dependent upon the size of the model area and the land use activity in the surrounding areas. For a large model area, such as an entire metropolitan area with minimal land use activity in neighboring areas, external travel would be minimal. Thus, its effect on the overall trip generation could be negligible except on some major routes providing interregional travel. For a small model area, such as a corridor or a small geography similar to the NBSD model area, the amount of external travel could be high. Therefore, careful handling of external travel is imperative for the robustness of the corridor model or small area geography.

For the NBSD model area, a total of 18 external zones were defined. The external zones are shown in Figure 3 as yellow boxes with the corresponding external zone number. Table 1 provides a list of roadways the external zones represent:

TABLE 1: EXTERNAL ZONES

TAZ	Roadway Name	TAZ	Roadway Name	TAZ	Roadway Name
101	Eastbound US 15/29	108	Rt. 694	115	Vint Hill Rd (US 215)
102	Colonial Rd	110	Rt. 600 (Beverleys Mill Rd)	116	Kennedy Rd
104	Glanaman Way	111	Pilgrims Rest Rd	117	Academic Dr
105	Suffield Ln	112	WB-US 15/29	118	Ringwood Rd
106	Rt. 694	113	Pleasant Colony Ln	119	Rt. 605 (Dumfries Rd)
107	Snow Mountain Rd	114	Rt. 684 (Buckland Mill Rd)	120	Atlee Rd

Section 6.3 outlines the procedure for estimating external travel along those 18 external zones.

4.0 DEMOGRAPHIC AND LAND USE

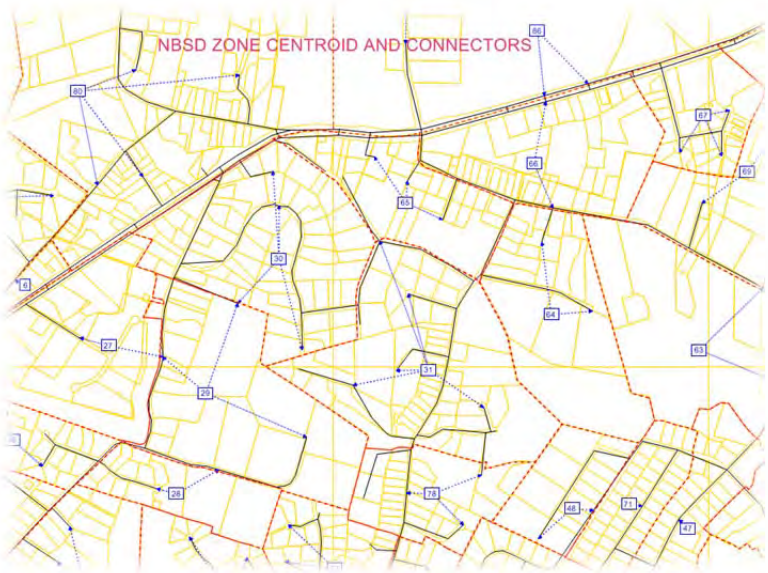

The central point of each traffic analysis zone, where trips begin and end on a transportation planning model network, is called a zone centroid. In VISUM, these centroids are also nodes in the model network, as the VISUM map on the right shows. Zone centroids are at the center of a zone, which consist of a variety of land uses bounded by the roadway network, census tracts, or other geographic or municipal boundaries.

Areas of residential land uses generate travel by producing trips through the activities occurring in these locations. Employment areas generate travel by attracting trips. The travel that occurs between trip generators takes place on one of the transportation modes available to the traveler. For the NBSD model, the available mode is only via the private automobile. Accurate estimates of demographic data are imperative to understanding current conditions and forecasting how this travel will occur in the future. Thus, population and households are key items for the transportation planning process.

4.1 POPULATION

As Table 2 indicates, over the last decade population has increased in Fauquier County and the Town of Warrenton. The same trend has occurred for the New Baltimore area, albeit no 2000 Census data was available. In 2008, the Fauquier County Department of Community Development estimated a population of 7,125 for New Baltimore Service District, which is roughly the same geography as the New Baltimore Census Designated Place (CDP). This number indicates a 14 percent growth in two years. This high population growth accounts for the housing units built at the Brookside development.

TABLE 2: VINT HILL DEVELOPMENT NON-RESIDENTIAL SQUARE FOOTAGE

Place	2000 Population	2010 Population	% Change
New Baltimore CDP*	NA	8,119	NA
Town of Warrenton	6,670	9,611	44.1
Fauquier County	55,139	65,203	18.3
Virginia State	7,078,515	8,001,024	13.0

Source: U.S. Census Bureau

4.2 HOUSEHOLDS

Fauquier County staff provided data on number of existing and future estimated dwelling units. For modeling purpose, the number of dwelling units is interchangeably used to represent the number of households.

In 2011, the NBSD has a total of 2,828 households. This number includes a 77.6% increase from 1991 data. It is projected that by year 2031 the NBSD will gain some 707 households representing a 25% growth over 20 years. Most of the growth is planned at TAZ 39 and TAZ 44, which encompass the planned Brookside Communities development.

For modeling purpose, the number of households is disaggregated into single family (SFDU) and multi-family dwelling (MFDU) units. Of the 2,828 dwelling units, only 24 were MFDU at Vint Hill. The 20-year forecast assumed no increase in multi-family dwelling units. The rest of the growth was spread evenly throughout the district.

HOUSEHOLDS BY TRAFFIC ANALYSIS ZONES

The number of households in the NBSD model area was determined for each TAZ. Fauquier County staff provided the aggregate single dwelling units for the 79 internal zones. Lochner staff determined the number of dwelling units for the remaining TAZ 80-90 internal zones. Some TAZs are already built up so no new dwelling units can be expected. While some TAZs have potential for new development, we just do not have information of future planned growth, hence no increase in dwelling units are assumed. Figure 6 is a VISUM map depicting the base year (2011) and future (2031) number of households for each TAZ. The number of households by TAZ is also summarized in tabular in the Appendix.

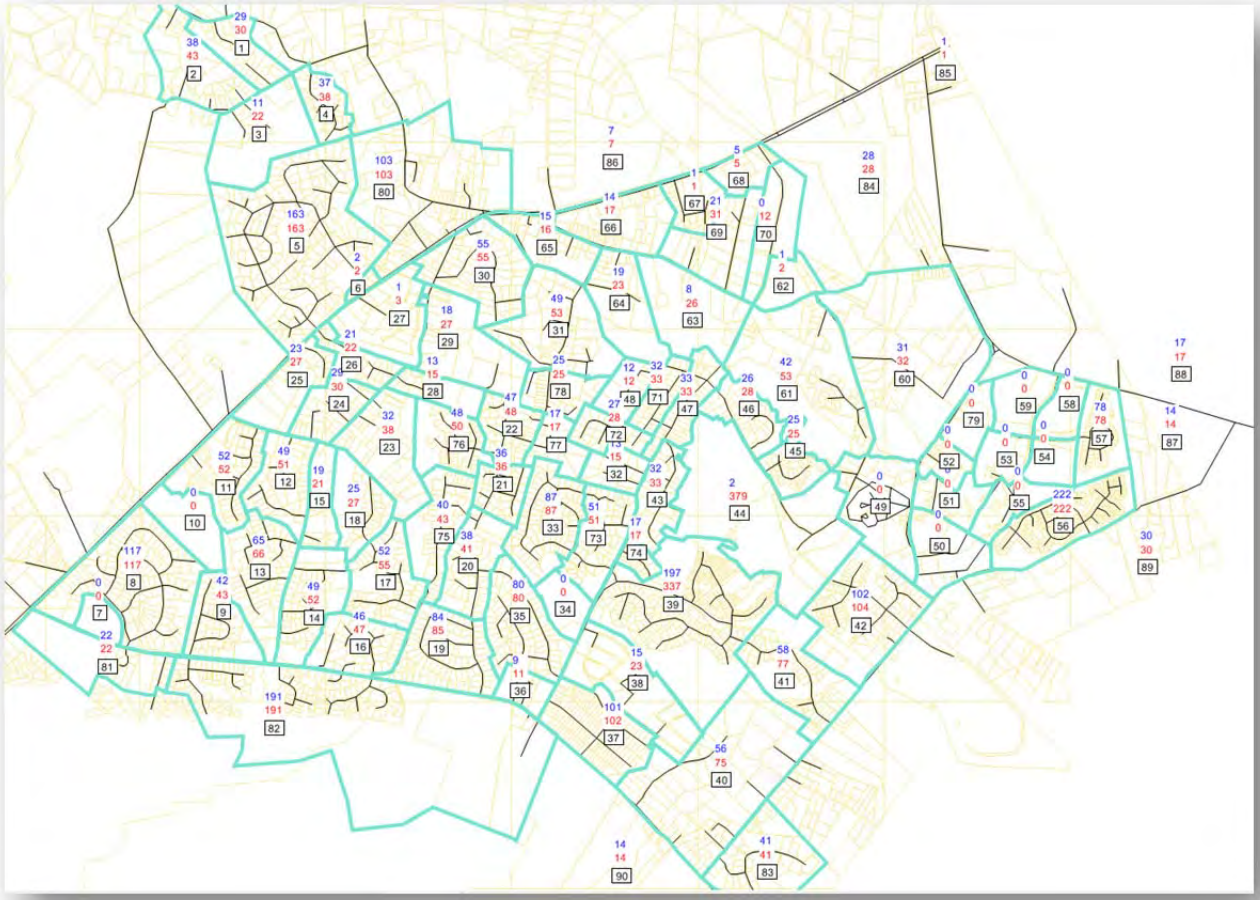

FIGURE 6: BASE YEAR (BLUE) and FUTURE (RED) NUMBER OF HOUSEHOLDS BY TAZ

4.3 EMPLOYMENT

A major factor that is used as a determinant for land use impacts on transportation is employment. The location and concentration of jobs in a region can produce severe constraints on transportation facilities. Increases in the employment base of an area can be used as a gauge of the growth of the area and emerging needs for access to and from the workplace.

BASE YEAR EMPLOYMENT FROM INFOGROUP

Fauquier County purchased a commercially available employment data from Infogroup. The data, provided in a spreadsheet format, was converted into a GIS shape file format in the same coordinate projection as the rest of the NBSD GIS layers.

The Infogroup employment data has an associated North American Industry Classification System (NAICS) that allows categorizing each employment to one of the land use categories in Table 4. The NAICS classified employment data was then coded to the NBSD TAZs. Figure 7 depicts the spatial distribution of Infogroup employment data.

County staff checked the employment data for reasonableness. County staff recommended using Infogroup employment numbers only for TAZs outside the Vint Hill development. Thus, employment

numbers for TAZs 49-59 was derived from estimate of non-residential areas square footage. The conversion of square footage to employment number is discussed below.

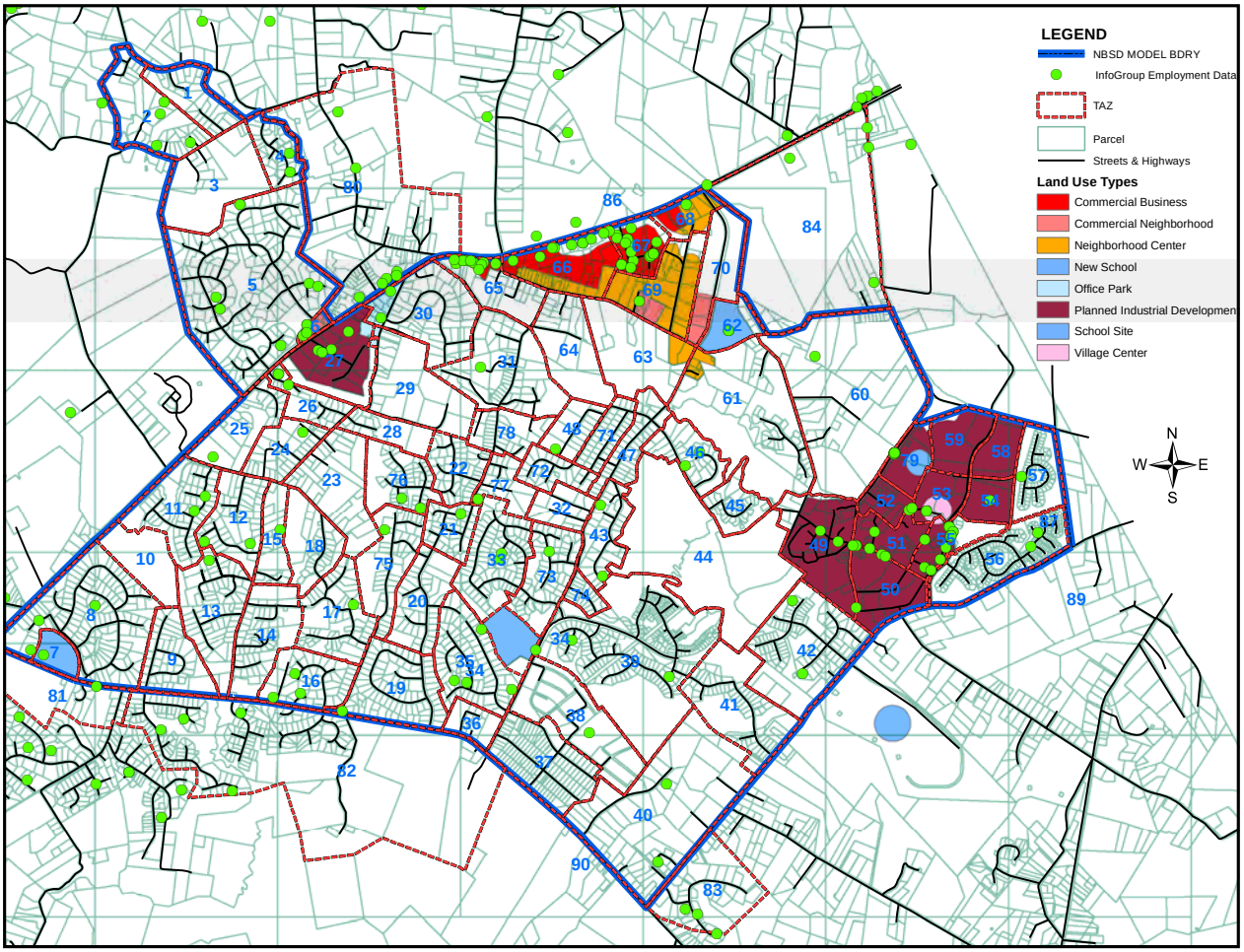

FIGURE 7: BASE YEAR (2011) INFOGROUP EMPLOYMENT BY TAZ

BASE YEAR EMPLOYMENT FOR VINT HILL DEVELOPMENT

Table 3 presents a summary of base year non-residential square footage at the Vint Hill area development. Non-residential uses are classified into three broad categories, namely: Office, Flex Industrial, and Commercial. Trip generating characteristics are significantly different for the land uses in these categories.

The use of Infogroup employment data outside the Vint Hill development and non-residential square footage within the Vint Hill development required conversion factors to convert square footage to employment by land use type as defined in Table 4. The trip generation rates by land use type from the ITE Trip generation Manual, 8th Edition, were adopted to determine number of trips generated by each type of land use at the Vint Hill area TAZs. The ITE Manual provides trip generation rates by square footage and by number of employees. These rates were used as conversion factors to derive the employment numbers for TAZs 49-59.

TABLE 3: BASE YEAR (2011) VINT HILL DEVELOPMENT NON-RESIDENTIAL SF

TAZ	Total (Square Foot)	Office (Square Foot)	Flex Industrial (Square Foot)	Commercial (Square Foot)
49	40,384	8,739	31,645	0
50	101,084	15,000	72,084	14,000
51	18,107	10,000	0	8,107
52	125,706	49,556	76,150	0
53	89,660	71,660	18,000	0
54	155000	155000	0	0
55	93,162	18517	74645	0
56	0	0	0	0
57	0	0	0	0
58	0	0	0	0
59	0	0	0	0
Totals	**623,103**	**328,472**	**272,524**	**22,107**

4.4 LAND USE CATEGORIES

The land uses and development patterns that make up a region provide insight into the community's economic health, environmental awareness, and transportation requirements. With regard to planning and providing for transportation facilities and services, activities that occur in each of the various land uses across the New Baltimore Service District and other service districts and areas in Fauquier County form the basis of travel demand through the trips they generate. The transportation system provides the means through which this demand is met and as such is the mechanism through which commerce flows and personal mobility occurs. Expanded or new transportation facilities and services, accompanied with other types of expanded or new infrastructure, allow a community to expand into new areas as development occurs. As such, land use and transportation are inextricably linked.

Table 4 defines the major land use categories used for the NBSD model area. The land use categories include uses that do not currently exist in the NBSD. Examples of these uses are group quarters and hotel/motel. Inclusion of these uses is not only for future model use, but also for modeling the remaining seven service districts under Phase 2 of Fauquier County travel demand model development.

TABLE 4: NBSD LAND USE CATEGORIES

Code	Land Use Category	Units	Description
LU1	Single Family Residential	Dwelling Units	Includes those lands occupied by either a single family home, duplex or a manufactured home on a single lot.
LU2	Multi-Family Residential	Dwelling Units	Uses contain three or more residential units on a parcel of land. In addition, this category includes mobile home parks, apartment buildings, and some condominiums.
LU3	Group Quarters	Rooms	Include congregate care facility. Congregate care facilities typically consist of one or more multiunit buildings designed for elderly living. They may also contain dining rooms, medical facilities, and recreational facilities*.
LU4	Hotel/Motel	Rooms	Uses are included in NAICS 72100-721214: Includes occupied motel rooms, hotels and camp areas.
LU5	Industrial, Manufacturing and Wholesale	Employees	Uses are included in SIC categories: 15-17, 20-49 (except 43, 45, and 472), 50-51 within a broad range of general and specialty contractors: the production of food, textile, wood, furniture, paper, printing, metal, machinery, electrical and other products; and also includes Transportation, Communication and Public Utilities, such as railroads, trucking and warehouse, air transportation, pipelines, communication towers and electrical, gas and sanitary services. Wholesale Trade facilities include the storage of durable or non-durable goods.
LU6	Retail Trade	Employees	Includes those uses identified in SIC categories: 43, 45, 52-59 and 72-79. Retail uses include a broad range of establishments that sell goods directly to the general public, such as restaurants, automotive dealers, home furnishings, food stores or other products. Also included are service establishments that have significant customer traffic, post office and air transportation.
LU7	Offices	Employees	Includes those uses in SIC categories: 81, 83-97. Offices include business services such as advertising, engineering, legal services and other assorted services. These also include services which are owned or operated by units of government and provide the administration of public programs.
LU8	Finance, Insurance, and Real Estate Services (FIRES)	Employees	Are those land uses in SIC categories 60-67 and 472, which have more customer traffic than typical offices. These include financial institutions, banks, insurance, real estate offices, and travel agencies.
LU9	Medical	Employees	Are those land uses in SIC category 80 which include all health services, doctors offices, and hospitals.
LU10	Agriculture, Forestry, Mining	Employees	Are those land uses included in SIC categories: 01-03, 07-14 and generally relate to agricultural production, services, timber tracts and products, and mining extraction activities.
LU11	Schools	Employees	Are included in SIC 82.

4.5 BASE YEAR (2011) LAND USE

For modeling purposes, households and employment by traffic analysis zones are termed as "land use" input. A summary of the base year (2011) land use by TAZ is given in Appendix A.

4.6 FUTURE (2031) LAND USE

Most of the projected growth in employment is concentrated at the Vint Hill development. Table 5 a summary of the projected 20-year growth. A summary of future land use for the model area is provided in Appendix B.

TABLE 5: FUTURE (2031) VINT HILL DEVELOPMENT NON-RESIDENTIAL SF

TAZ	Total (Square Foot)	Office (Square Foot)	Flex Industrial (Square Foot)	Commercial (Square Foot)
49	90,000	49,500	40,500	0
50	0	0	0	0
51	20,000	0	0	20000
52	60,000	33,000	27,000	0
53	40,000	19,500	20,500	0
54	0	0	0	0
55	18,000	0	0	18000
56	0	0	0	0
57	0	0	0	0
58	200,000	110,000	90,000	0
59	50,000	30,000	20,000	0
Totals	**478,000**	**242,000**	**198,000**	**38,000**

5.0 EXISTING ROADWAY SYSTEM AND BASE YEAR NETWORK MODEL

Roadways make up the backbone of the transportation system. Cars and trucks use the roadway system for mobility. Transit buses utilize roads for their routes. Bicyclists often travel directly on roads, especially in corridors with delineated bike lanes or designated bike routes. Even pedestrians utilize sidewalks that are often constructed in roadway rights-of-way. The most effective roads, called multimodal corridors, often accommodate all of these travel modes.

The primary goal of the NBSD transportation planning model is to simulate the PM peak hour (4:30-5:30) of travel on the roadway network within the NBSD model area. Specifically, the traffic model would replicate a 2011 weekday evening (PM) peak hour for the private automobile mode. In order for this simulation to be effective, it is important to obtain all transportation related data for that peak hour (a "snapshot" of time).

5.1 EXISTING NBSD ROAD NETWORK

The roadway network within the NBSD model area consists of primary and secondary roadways. The four-lane divided U.S. 15/29 highway that traverses the study area and is generally the northern boundary of the NBSD serves as the major primary roadway. The two-lane Route 215 that connects with U.S. 15/29 and traverses through Prince William County to the south and its intersection with Route 28 serves as the other primary roadway. Route 215 (Vint Hill Road) forms the east boundary of the NBSD area. All other streets internal to the service district are two-lane secondary roads. The NBSD is bounded to the south by Route 602 (Rogues Road) and Route 605 (Dumfries Road) is the western end of the NBSD area. The other major secondary roads within the NBSD include Route 600 (Broad Run Church Road), Route 675 (Kelly Road), Route 676 (Riley Road), Route 652 (Kennedy Road), and Brookside Parkway. Brookside Parkway is planned to be a 4-lane divided road that will eventually connect Route 605 with Route 215.

As Figure 8 depicts all the roadways in the NBSD area are included in the VISUM road network model. Figure 8 also shows the functional classification of the roadways in area as described in more detail in the next section.

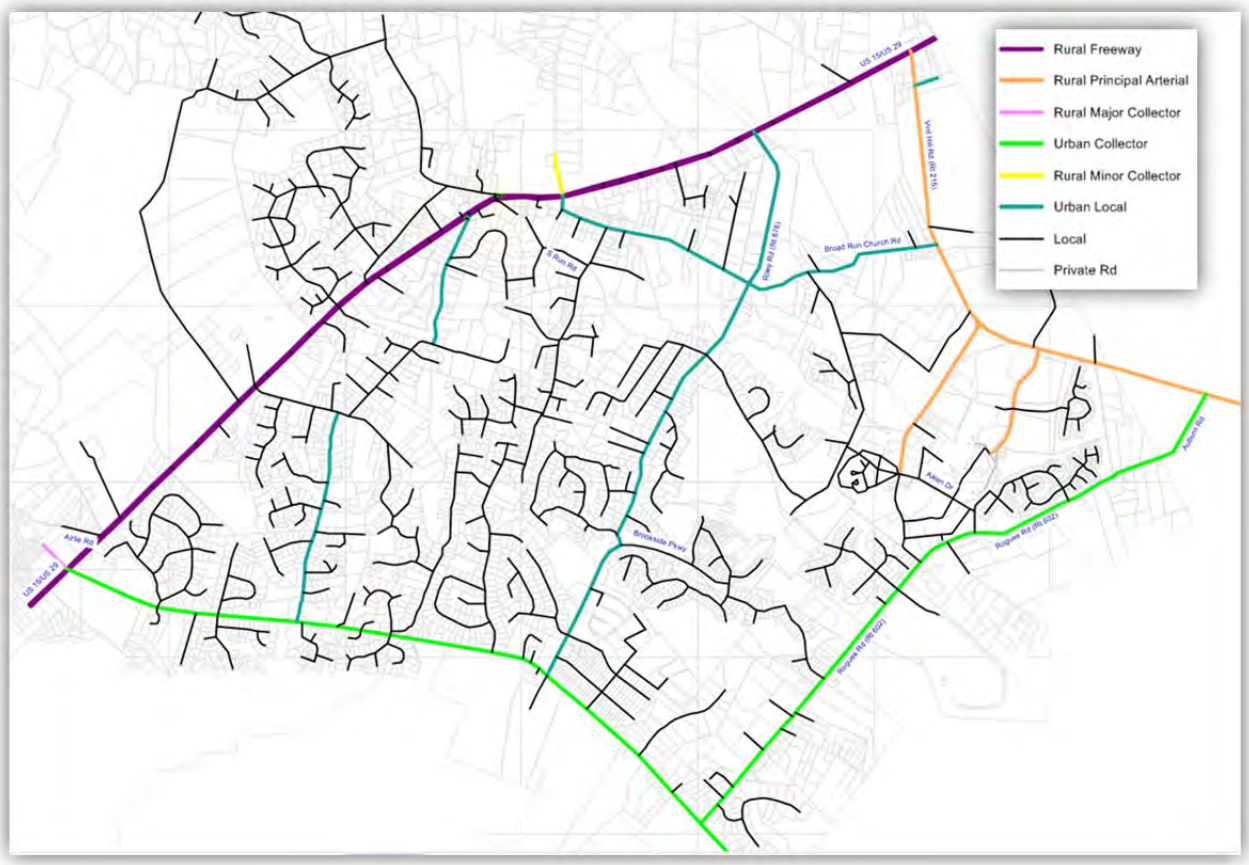

FIGURE 8: NBSD BASE YEAR (2011) NETWORK MODEL

5.2 FUNCTIONAL CLASSIFICATION

Functional classification is the process by which streets and highways are grouped into classes, or systems, according to the characteristics of the vehicular traffic they are intended to serve. All streets and highways are grouped into one of these classes, depending on the character of the traffic (i.e., local or long distance) and the degree of land access that they allow. Classification is based on each roadway's functional role in the overall network, including traffic movement and access. These classifications may change over time, as the function of roadways changes to serve different land uses or other transportation facilities. As an area becomes more developed, roads that have previously been classified in one category may be reclassified to a higher category.

The functional classification system is a hierarchical organization of streets and highways that facilitates the safe and efficient operation of vehicles along different types of facilities. As indicated in Figure 8, a functional roadway system facilitates a progressive transition in the flow of traffic from the provision of access to the provision of movement. Freeway and arterial facilities are at one end of the spectrum, primarily providing the function of moving vehicles. Collector and local streets are at the opposite end of the spectrum, providing access to property. Figure 9 also shows schematically how various street classifications relate to each other in terms of movement and access.

In setting up the network characteristics in VISUM, the functional hierarchy is important as it serves as the basis for assigning the appropriate link and node (intersection) attributes that includes lane and node capacities and travel speeds.

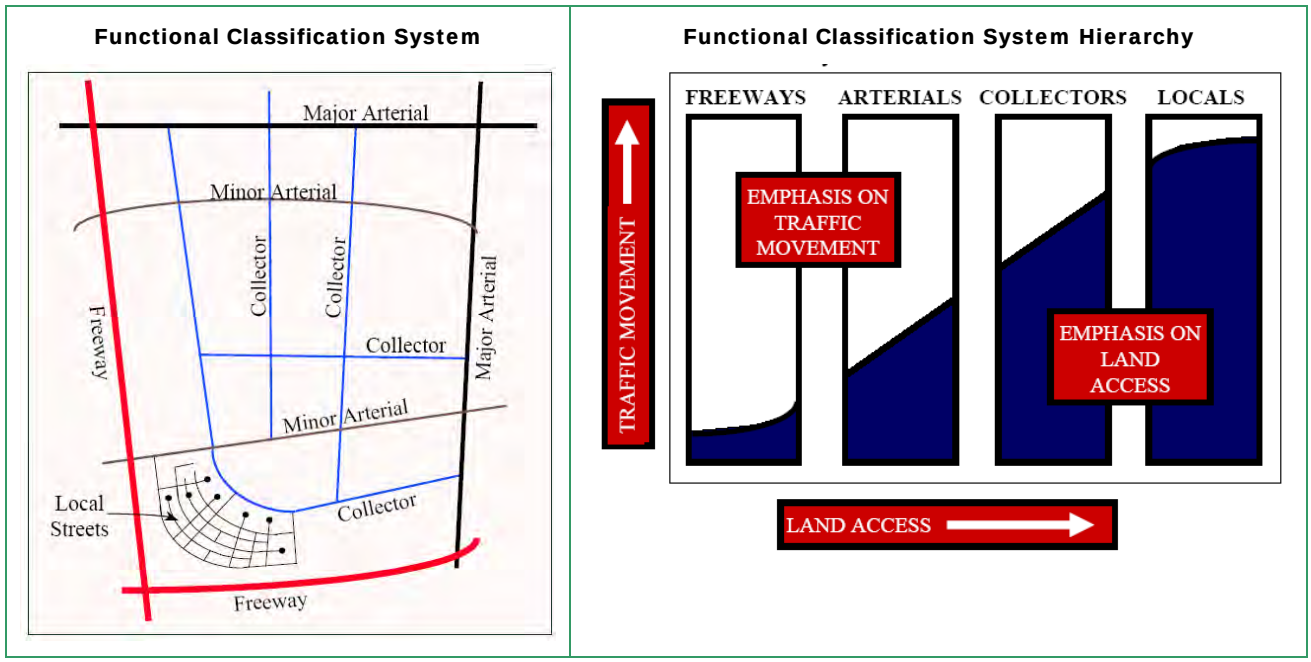

FIGURE 9: FUNCTIONAL CLASSIFICATION SYSTEM HIERARCHY

5.3 LINK ATTRIBUTES

A link is a vector that describes connectivity between two nodes. A node is an end point of a link. Typically, a node can be an intersection or an intermediate point between intersections.

Each street in the model is represented by a link or a group of links. Each link contains attribute data that defines the operation of that link. A link is a directional description of connection between beginning and ending node points. Data attributes needed for a link file in VISUM include:

- Classification (user-specifiable)
- Type (user-specifiable)
- Number of Lanes
- Length
- Volumes
- Design Speed (or posted speed limit)
- One- or Two-way Direction
- Capacity
- Area (user-specifiable)

Link Classification, Area, and Link Types

Link classification and area type are not currently specified in the NBSD model. The numeric codes for link types are listed in Table 6. Link types were used to define link capacities and to set the speed-delay functions used in the simulation process.

One-or Two-Way Direction

All links were checked for one- or two-way entry.

Number of Lanes

This attribute is used to assign capacities to network links. It is also used for display and in some network calculator functions. All model links were checked for accuracy with this designation.

Capacity

Capacity is entered in terms of vehicles per hour (vph) per lane for each link by direction. A global link capacity system was adopted for the NBSD model. The capacities were based upon Special Report 209 "1985 Highway Capacity Manual" and experience with other models.

In the context of model operation, the capacities are used in conjunction with link speeds, link lengths, and speed-delay functions to derive a realistic travel speed to be used in the distribution of travel and the derivation of appropriate travel routes. In the context of network analysis, the capacities are used to identify deficiencies and recommend improvements. In both cases, it is desired that the capacities used in the model be as accurate and realistic as possible.

Table 4 represents the capacities used for the PM peak model.

TABLE 6: NBSD LINK TYPES

Link Types	Description	Capacity Per Lane (vph)	Speed (mph)	Link Types	Description	Capacity Per Lane (vph)	Speed (mph)
10	Rural Freeway (Limited Access 4-6 Lanes)	1500	60	54	Urban Collectors (2-4 lanes)	800	30
11	Rural Freeway (Limited Access 4-6 Lanes)	1500	55	55	Urban Collectors (2-4 lanes)	800	25
12	Rural Freeway (Limited Access 4-6 Lanes)	1500	50	56	Urban Collectors (2-4 lanes)	800	20
13	Rural Freeway (Limited Access 2-3 lanes)	1200	55	60	Rural Minor Collector	800	50
14	Rural Freeway (Limited Access 2-3 lanes)	1200	50	61	Rural Minor Collector	800	45
15	Rural Freeway (Limited Access 2-3 lanes)	1200	45	62	Rural Minor Collector	800	40
16	Rural Freeway (Limited Access 2-3 lanes)	1200	40	63	Rural Minor Collector	800	35
17	Rural Freeway (Limited Access 2-3 lanes)	1100	35	64	Rural Minor Collector	700	30
30	Rural Principal Arterial (4-6 lanes)	1200	55	65	Rural Minor Collector	700	25
31	Rural Principal Arterial (4-6 lanes)	1200	50	66	Rural Minor Collector	700	20
32	Rural Principal Arterial (4-6 lanes)	1200	45	70	Urban Local	600	50
33	Rural Principal Arterial (2-3 lanes)	1000	55	71	Urban Local	600	45
34	Rural Principal Arterial (2-3 lanes)	1000	50	72	Urban Local	600	40
35	Rural Principal Arterial (2-3 lanes)	1000	45	73	Urban Local	600	35
36	Rural Principal Arterial (2-3 lanes)	1000	40	74	Urban Local	500	30
37	Rural Principal Arterial (2-3 lanes)	1000	35	75	Urban Local	500	25
40	Rural Major Collector	900	50	76	Urban Local	500	20
41	Rural Major Collector	900	45	77	Urban Local	500	15
42	Rural Major Collector	900	40	80	Local	600	50
43	Rural Major Collector	900	35	81	Local	600	45
44	Rural Major Collector	800	30	82	Local	600	40
45	Rural Major Collector	800	25	83	Local	600	35
46	Rural Major Collector	800	20	84	Local	500	30
50	Urban Collectors (2-4 lanes)	900	50	85	Local	500	25
51	Urban Collectors (2-4 lanes)	900	45	86	Local	500	20
52	Urban Collectors (2-4 lanes)	900	40	87	Local	500	15
53	Urban Collectors (2-4 lanes)	900	35	90	Private Road	500	25

Speed

Speeds have a direct influence on the computation of travel times during model runs. Generally, posted speed limits are entered into the program during the initial data entry phase. However, posted limits do not always accurately depict the free-flow conditions on the roadway. For example, some state highways have 55 mph speed limits in rural areas that may be ignored. Conversely, some locations may have posted limits greater than what can be achieved (e.g., roads in CBD areas with numerous driveways and intersection delays). During the model update process, plots of coded speeds were reviewed for appropriate input speeds. Changes were made to all links noted on the plots to begin the calibration process using the posted speeds.

Link speeds were coded in VISUM in miles per hour. The speeds were based on field data and assigned to each link based on the associated link type in Table 4. Figure 10 depicts the link speeds for the base year network.

During the calibration process, roadway operating speeds from the model were reviewed to justify modifications to the posted speed limit coded in the model as well as link and node delay coefficients. These modifications were made to reflect conditions and traveler perceptions that are different from the posted speeds. Very few link speeds were modified during calibration.

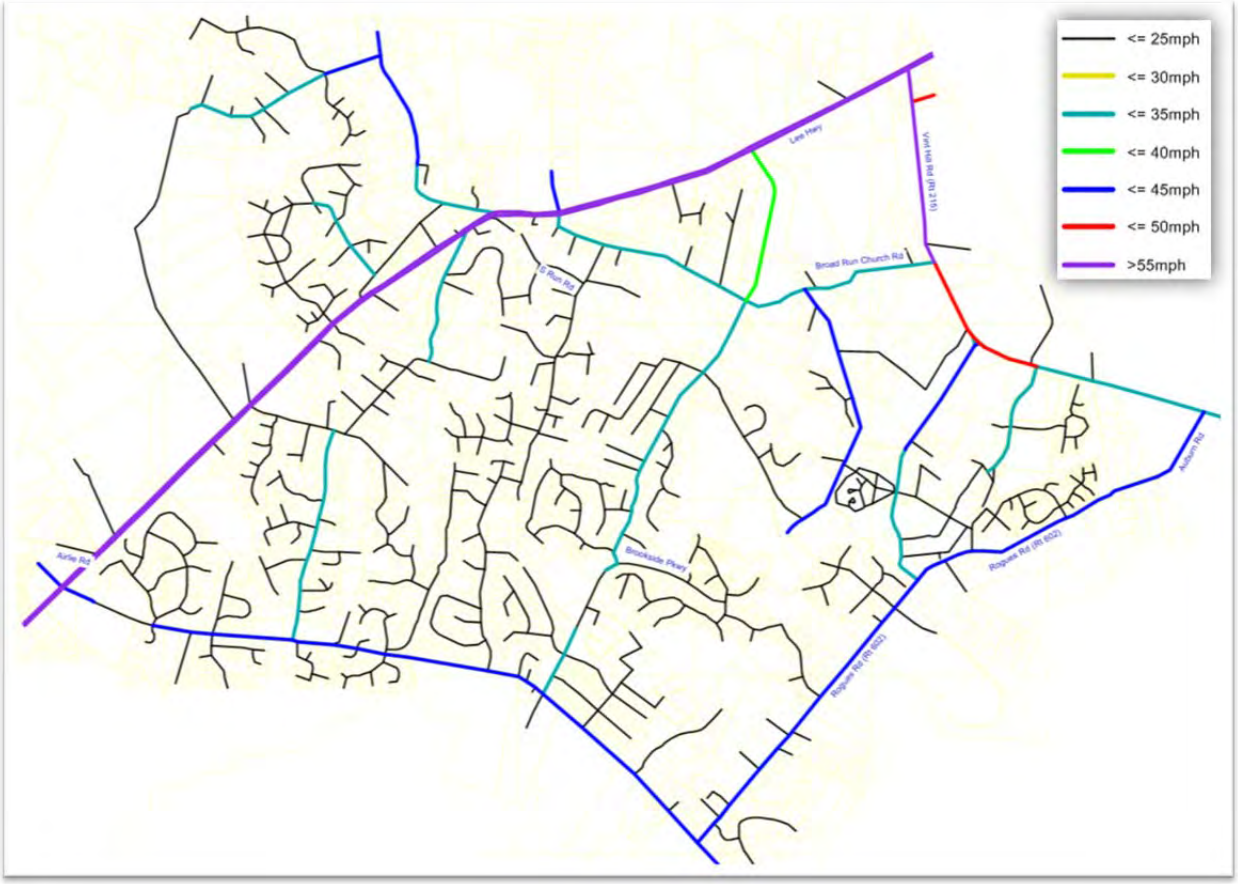

FIGURE 10: NBSD ROAD NETWORK MODEL TRAVEL SPEEDS

Observed Volumes

Traffic counts were coded for all links that had data available. It is best to have directional, peak hour counts for a peak hour model. Traffic counts were collected in the field at selected intersections depicted in Figure 11. During March 2011, turning movements were observed from 4:00-7:00 PM and a peak hour was established to occur mostly between 4:30-5:30 PM. These observed volumes were coded into VISUM's link and node attributes for use in model calibration. Due to budgetary constraint it was decided at the onset not to model the AM peak.

In addition to field collected traffic counts, available traffic volumes data from the Virginia Department of Transportation (VDOT) were also coded in VISUM. At the time of the model calibration the published traffic counts were for 2009 or prior year daily traffic volume estimates. The differences in years the counts were observed were not a factor in the calibration as those counts were simply referred for reasonableness checking of model volumes. Figure 12 shows the coded volumes in BLUE for the field observed counts and in MAROON the PM peak estimates of traffic volumes from VDOT.

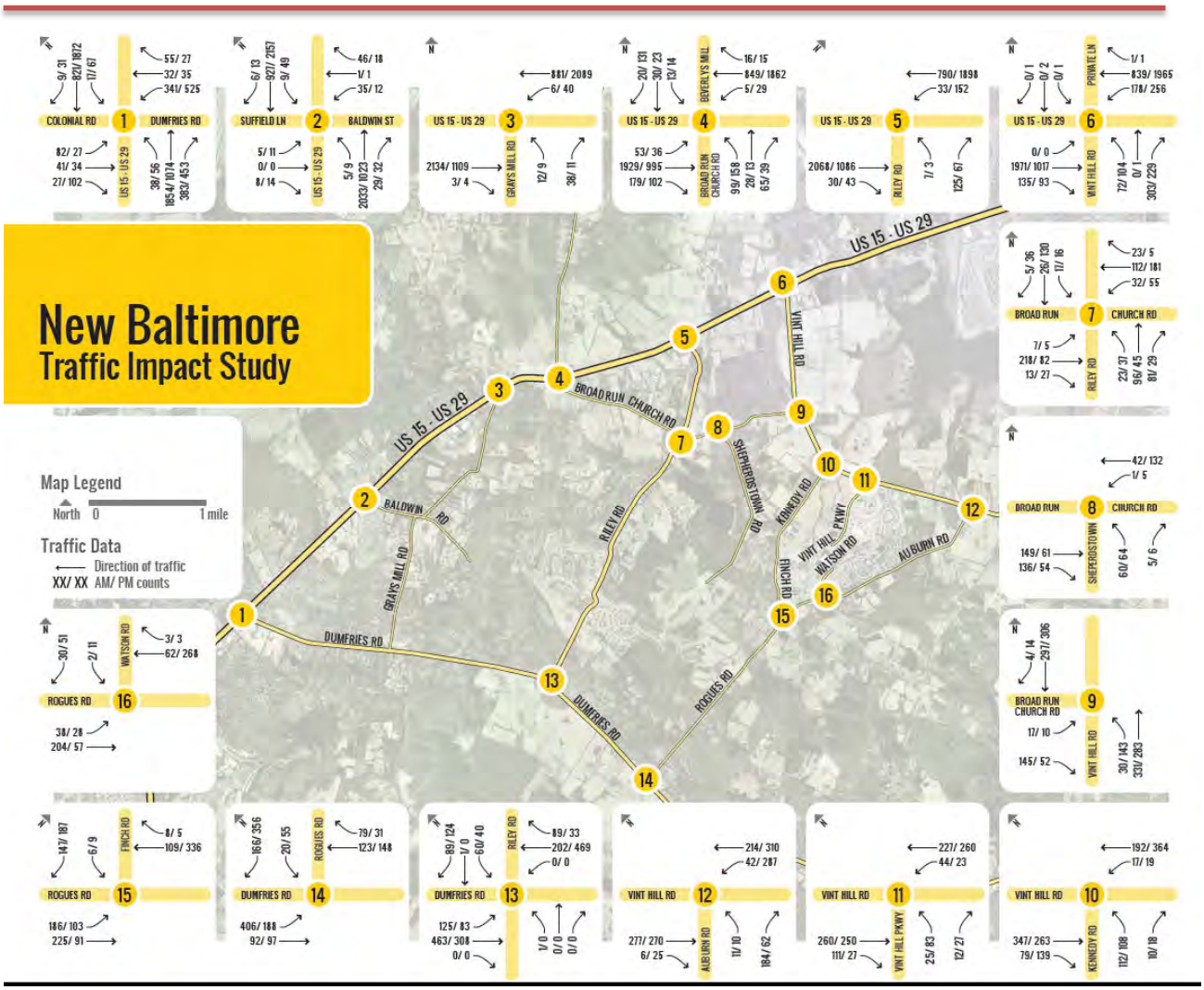

FIGURE 11: BASE YEAR (2011) PM PEAK TURNING MOVEMENTS

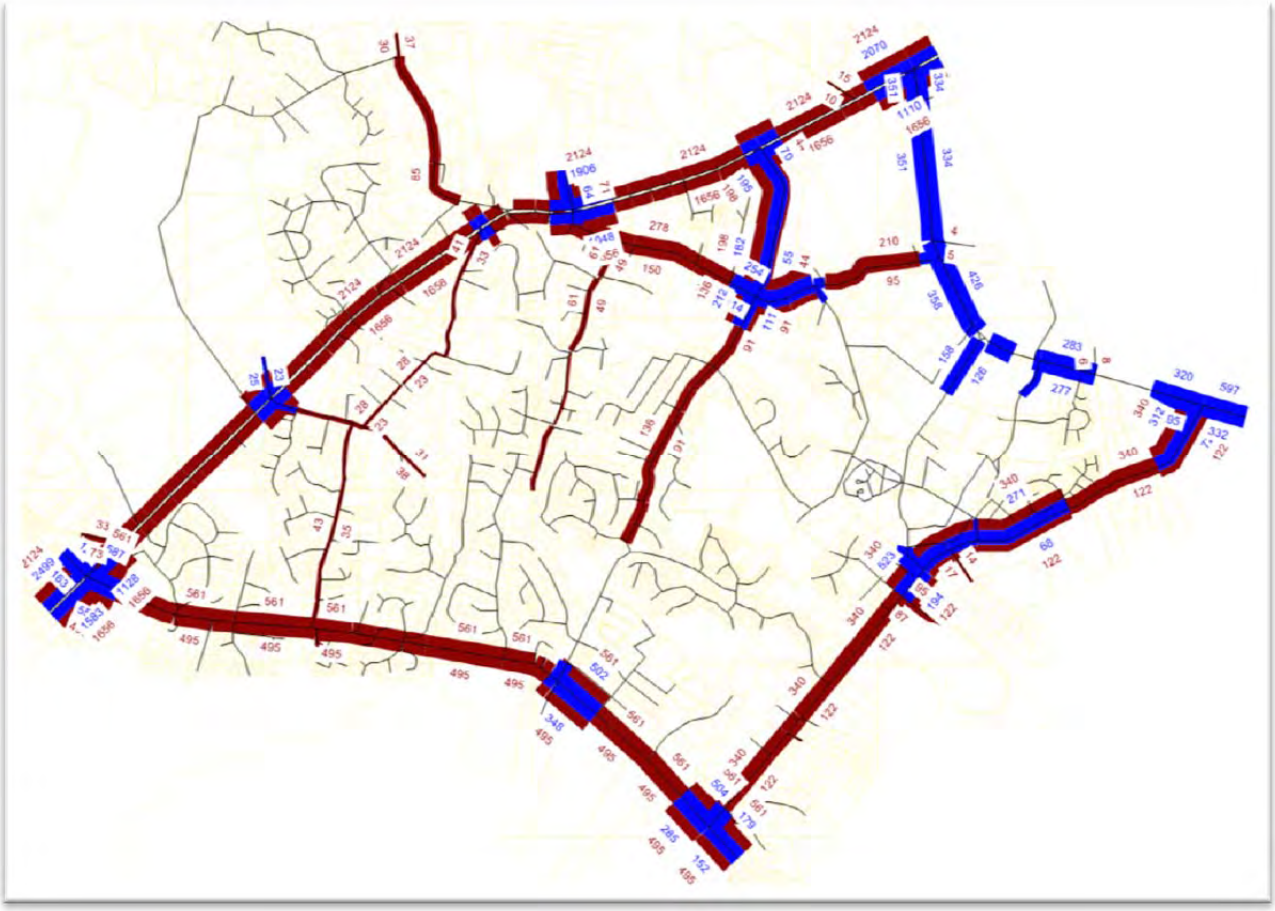

FIGURE 12: FIELD OBSERVED COUNTS (BLUE) AND VDOT COUNTS (MAROON)

5.4 NODE ATTRIBUTES

The beginning and end points of each link are called nodes. A node can be an intersection, a zone centroid, or an intermediate point between intersections. In VISUM all nodes are coded with data, which defines the operating characteristics of that node. Data needs for node files include the following:

- Classification (user-specifiable)
- Type (user-specifiable)
- Base Delay
- Area (user-specifiable)
- Capacity

Node Classification

The node classifications were coded in the model dependent upon the intersection control. Delay equations are defined by node class, so it is important that the node class is properly coded. Table 7 lists the node classifications used in the NBSD model. These were refined during the model calibration process. Figure 13 depicts the coded intersection control in VISUM.

It is important to note that the current model implementation does not take into account the signal controls as timing plans were not coded into VISUM. In future application signal timings can be easily incorporated into the model.

TABLE 7: NODE (INTERSECTION) CLASSIFICATION

Node Class	Description
1	Shape Node (Not an Intersection)
2	Network with Centroid Connector
3	Zone Centroid – Internal Zone
4	Zone Centroid – External Zone
5	Ramp Diverge
10	All-Way Stop Control
11	Partial Stop Control
12	Yield Control
13	Uncontrolled Intersection
20	Signalized Intersection
21	Traffic Circle
22	Pedestrian Only Signal or Mid-Block Crosswalk with large volume
99	Future Intersection

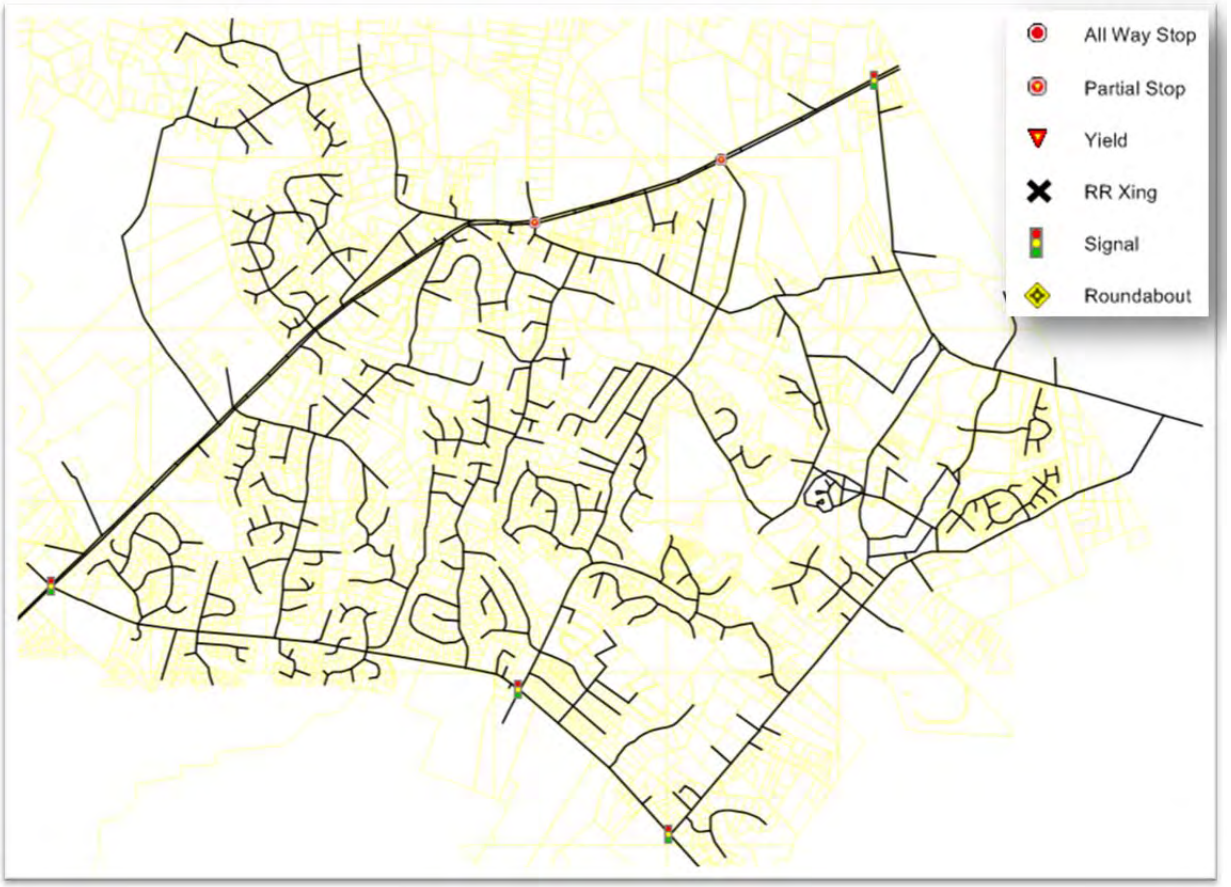

FIGURE 13: NBSD CODED INTERSECTION CLASSIFICATION

Node Area

Node Area is used to code the index number of the intersection for turn movement analysis. Each intersection was coded with a unique identification number for potential turn movement analysis. Turns were saved for each of these intersections during the calibration and forecast runs.

Node Type

Node type has been used to designate the node capacity equations for computation of the node capacities. The node type system closely follows the link functional classification system. Node types have been grouped to show whether the intersection represents links meeting of similar or different functional classifications. If the link classifications are the same the Type is designated as 20 for a 4 leg intersection or 30 for a 3 leg intersection. If the link classifications are different by a value of one, such as a Principal Arterial (Class 3) intersecting with a Minor Arterial (Class 4) the Type is designated as 21 or 31. Table 7 lists the node types.

6.0 TRAVEL MODEL DEVELOPMENT

This section outlines the general model development process adopted for calibrating the NBSD PM peak model in VISUM.

6.1 THREE-STAGE MODEL PROCESS

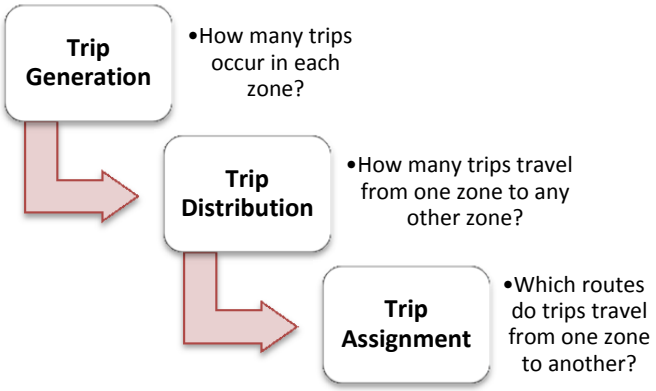

The model process adopted for the NBSD follows the conventional "four-step" process, which consists of four distinct procedures: trip generation, trip distribution, modal choice, and trip assignment. However, for the NBSD application, there is no modal choice as transit is not an available mode in the model area. Thus the process is a three-stage sequential process; i.e., first trip ends are estimated, then they are distributed between zones based on some measure of attractiveness between zones. After trips are distributed between zones, the share of trips using different modes is estimated. Then trips by mode are assigned onto the network system. Trip assignment predicts the routes that the trips will take, resulting in traffic forecasts for the highway system.

There are known shortcomings of the three-stage process. It is argued that travelers do not necessarily make their travel decisions in a sequential manner-- that they first choose the place they want to go then after making that choice they will then decide how they will travel to get to their destination. Thus, some paradigm shifts in the modeling process have occurred where some travel decisions are modeled simultaneously. For example, the choice of destination and mode are combined as a single decision. While simultaneous treatment of trip-making decisions simulate closer to actual decision-making, availability of travel data is a major problem in developing a more technically advanced travel model estimation approach.

TRIP GENERATION

The Trip Generation step addresses the question, how much travel is made in a place or zone? This step of the process determines the number of daily trips (or the number of trips made during the peak hour) that takes place in the area (or will take place in the future). These trips are estimated using certain assumptions about the number of trips typically made by each type of household and to each type of destination in the area.

Trip productions and attractions are usually determined in terms of "person" trips and then converted later to vehicle trips by applying an auto occupancy factor. In some cases, productions and attractions are derived directly as number of vehicle trips. This is usually the case when using the average trip generation rates of various land uses published in the ITE Trip Generation Rates manual.

A major component of the trip generation process is to estimate appropriate trip generation equations. In theory, trip generation rates should be developed from travel surveys. When survey data is not an option, or if the available data are found inadequate, the trip rates are usually borrowed from other similar urban areas where trip generation rates have been previously developed.

A number of factors or variables are found to be good predictors of zonal trip productions and attractions. Socioeconomic variables such as the number of households, household size, level of auto ownership and income are good predictors of zonal production rates. The greater the numbers of households in a zone, the more trips are expected to be generated. Likewise, the more cars a household has, the higher the propensity for making trips. Affluence is also related to increased propensity to make more trips. On the other hand, land use variables such as employment, location of schools, high retail trip generators, or number of hotel/motel rooms are good predictors of zonal attractions. The more employment a zone has, the more work trips it attracts. The more retail employees in a zone, the more shopping trips are assumed to be attracted there.

Because trips made for different trip purposes have different trip distributions, trip generation results are often stratified into different purposes, such as home to work or home to shop or home to school. This categorization is necessary because each trip purpose reflects the behavior of the trip maker. For example, school trips and work trips are fairly regular compared to shopping and recreational trips. Moreover, work trips are usually longer while shopping trips are generally shorter.

For the NBSD model, trips are stratified into three: Home-based Work, Home-based Other and Non Home-based. Zonal trip productions and attractions by purpose are derived by applying the average generation rates for each land use described in Section 4. The absence of data from travel surveys in the model area justified the use of average generation rates from the 8th edition of the ITE Trip Generation Handbook. Trip generation rates by trip purpose for the land use categories in Table 4 is summarized Table in 7.

TABLE 8: TRIP GENERATION RATES

LAND USE	HOME TO WORK		WORK TO HOME		HOME TO OTHER		OTHER TO HOME		NON-HOME BASED		Total Origins	Total Destinations	PM Peak Hour Trips
	Origin	Dest.	Origin	Dest.	Origin	Dest.	Origin	Dest.	Origin	Dest.			
SFDU	0.085	0.000	0.000	0.339	0.240	0.000	0.000	0.265	0.035	0.045	0.360	0.649	1.009
MFDU	0.035	0.000	0.000	0.171	0.168	0.000	0.000	0.204	0.030	0.042	0.233	0.417	0.650
Group Quarter	0.015	0.010	0.007	0.033	0.037	0.010	0.007	0.024	0.007	0.019	0.073	0.096	0.169
Hotel/Motel	0.000	0.022	0.024	0.014	0.036	0.056	0.036	0.042	0.144	0.146	0.240	0.280	0.520
Industrial/Manufacturing/Wholesale	0.000	0.052	0.170	0.000	0.000	0.042	0.082	0.000	0.058	0.018	0.310	0.112	0.422
Retail	0.000	0.285	0.363	0.000	0.000	0.200	0.255	0.000	0.147	0.116	0.765	0.601	1.366
Office	0.000	0.037	0.157	0.000	0.000	0.023	0.113	0.000	0.065	0.013	0.335	0.073	0.408
Finance, Insurance, & Real Estate	0.000	0.030	0.363	0.000	0.000	0.206	0.254	0.000	0.109	0.138	0.726	0.374	1.100
Medical	0.000	0.019	0.145	0.000	0.000	0.053	0.092	0.000	0.026	0.024	0.263	0.096	0.359
Agriculture, Forestry, & Mining	0.000	0.005	0.176	0.000	0.000	0.044	0.096	0.000	0.048	0.031	0.320	0.080	0.400
Schools	0.000	0.034	0.036	0.000	0.000	0.039	0.041	0.000	0.025	0.026	0.102	0.099	0.201
XI-O	0.205	0.000	0.205	0.000	0.205	0.000	0.205	0.000	0.180	0.000	1.000	0.000	1.000
IX-D	0.000	0.205	0.000	0.205	0.000	0.205	0.000	0.205	0.000	0.180	0.000	1.000	1.000

When the trip generation procedure is completed, we have an estimate of the trips produced and attracted to each zone, but at this point in the process it has not been determined which travelers are going to which destinations. The task of matching the trips produced in each zone with the zone to which those trips are attracted is accomplished in the second step, trip distribution.

TRIP DISTRIBUTION

Trip distribution is a vital part of the planning process because the trip interchanges between each zone pair eventually has to be accommodated by the transportation system. Trips "produced" and those "attracted" are linked geographically into origin-destination (OD) pairs. The modeling process for trip distribution relies on the general assumption that time spent in traveling is perceived negatively— the more distant the destination, the more objectionable the trip. Most of the trips produced in a given zone will be attracted to surrounding or nearby zones; some will be attracted to moderately distant zones; and very few will be attracted to very distant locations. This general principle is translated into a

mathematical procedure known as a "gravity model," with the measure of attractiveness or accessibility between each zone pair takes either distance or travel time or a combination of both. The combination of both distance and time is often referred to as the “generalized cost” of travel. This measure of attractiveness is often termed "friction factor." Different friction factors reflecting differences in trip making by trip purpose are necessary. The effect of travel time in discouraging trips is more pronounced for non-work trips than for commute trips, where trips fall off less sharply with distance.

For the NBSD model, the trip distribution procedure follows the gravity model technique. VISUM computes the distribution with the gravity model using the following form:

$$\mathrm{Trips}_{ij} = \frac{\dfrac{P_i A_j}{(d^b_{ij} + K(d^a_{ij}))}}{\sum \dfrac{A_j}{(d^b_{ij} + K(d^a_{ij}))}}$$

where:

Tripsij	=	Trips between zones i and j
Pi	=	Productions (Origins) at Zone i
Aj	=	Attractions (Destinations) at Zone j
dij	=	distance between the zones
K	=	constant
a,b	=	exponents

Outputs from the trip distribution step are the zone-zone origin-destination (OD) trips by purpose, which are then combined into one total OD trip matrix for assignment onto the highway network.

TRAFFIC ASSIGNMENT

The trip assignment step simulates the route choices of individual drivers. Given the number of trip interchanges between zone pairs, the assignment algorithm predicts the best (usually cheapest route) for each driver. The route choice decision is usually represented by the cost involved, where cost is either time or distance, or a combination of both. Usually, travel time is used as a cost measure. If distance component is included, it usually is just a small fraction.

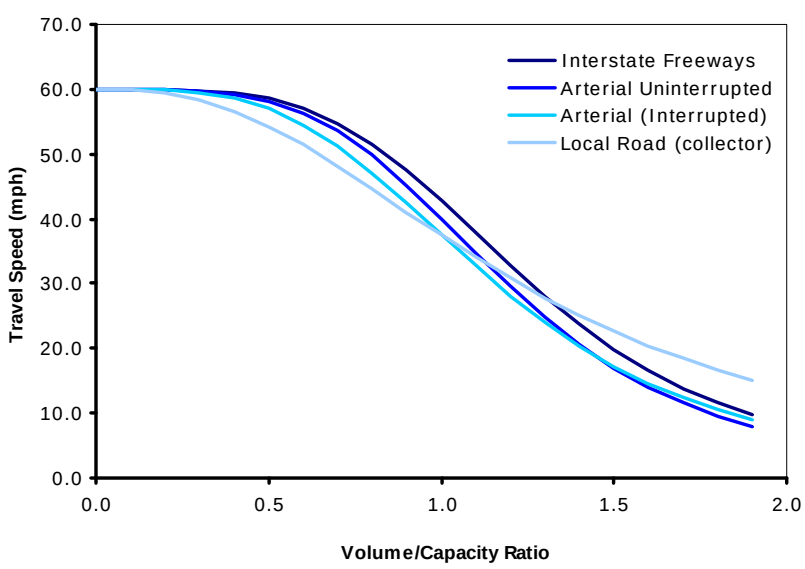

Travel cost is usually expressed as travel impedance functions, and has direct relationship with traffic volumes. The impedance functions are also often related to the functional class of the road. High-class roads, such as freeways, have higher speeds with no interference from local traffic, therefore, offer

shorter journey times. Typical impedance relationships (or volume delay curves) are often expressed in terms of travel times as a function of traffic volumes. Since travel time is an inverse of speed, travel impedance functions can also be expressed as speed and volume to capacity ratio as the graph on the right depicts.

The NBSD model adopts the equilibrium assignment algorithm in assigning the trips between OD pairs. The distributed trips on the trip table are allocated to the shortest travel paths between each zone. The assignment is performed incrementally. That is, slices of the trip table from each zone are loaded on the network. Trips from all zones are assigned each increment, with all zones being treated equally. As each increment of trips is added to the network, the number of trips on each link builds. As these trips build, some links and nodes approach capacity. These changes the travel times on subsequent slices and reallocates the shortest paths between the zones representing trips being diverted by traffic congestion. After the entire trip table is assigned, the accumulated trips along a link represent its assigned volume.

The NBSD model also used Multi-Point Assignment (MPA). Traditionally all trips begin or end at the zone centroid, a point in the center of the zone. In reality, trips begin at driveways, parking lots, and other places in the zone. MPA allows the modeler to define the access points for each zone.

The series of calibration simulation runs involves review of the assumptions used to construct the model. In the distribution portion of the simulation, the exponents to the distance function of the gravity model are examined. During the assignment portion of the simulation, the assumptions for link speeds, capacities, and delay parameters are studied. Between each run, different parameters are evaluated and necessary adjustments made to the "rules" so that the desired results (i.e., calibration) are reached.

6.3 EXTERNAL TRAVEL

The estimation of external trips assumes that counts of the average PM peak hour on each of the major highways entering the study area at the cordon line are available. The sum of the counts for all stations, representing total cordon crossings, is greater than the total number of external trips because through trips cross the cordon twice, such as in stations C and D described earlier in Figure 5.

For the NBSD model, the PM peak hour traffic volumes at each of the 18 identified external zones were obtained from field observations of turning movements and from VDOT published traffic data. Some low volume streets did not have observed counts. The external volumes were estimated. Table 8 provides a summary of traffic volumes at external zones.

The following steps are required for developing internal-external, external-internal, and external-external volumes:

- Estimation of through trips at each station,
- Distribution of through trips between stations,
- Estimation of external-internal trip productions and attractions, and
- Distribution of internal-external and external-internal trips between zones and external stations.

External trips were added to the internal trips estimated from the land uses generated at each internal zone.

TABLE 9: BASE YEAR (2011) TRAFFIC VOLUMES AT EXTERNAL ZONES

TAZ	Roadway Name	PM Volumes (vph)		TAZ	Roadway Name	PM Volumes (vph)	
		From	To			From	To
101	Eastbound US 15/29	1590	2500	112	WB-US 15/29	2230	1250
102	Colonial Rd	170	130	113	Pleasant Colony Ln	10	10
104	Glanaman Way	10	10	114	Rt. 684 (Buckland Mill Rd)	10	114
105	Suffield Ln	25	25	115	Vint Hill Rd (US 215)	600	340
106	Rt. 694	25	25	116	Kennedy Rd	20	30
107	Snow Mountain Rd	20	25	117	Academic Dr	170	170
108	Rt. 694	30	40	118	Ringwood Rd	15	15
110	Rt. 600 (Beverleys Mill Rd)	170	70	119	Rt. 605 (Dumfries Rd)	180	160
111	Pilgrims Rest Rd	15	20	120	Atlee Rd	40	50

6.4 COMMERCIAL VEHICLE TRAVEL

Travel by vehicles other than the passenger cars can be categorized as commercial vehicle travel. It is important to account in the model the trips made by commercial vehicles as they have significant impact to the level-of-service (LOS) of the road system. Trucks contribute largely to congestion and impose significant delay mainly on arterial roadways, at the toll plazas, and at major intersections.

In the NBSD model area, the only route with significant truck traffic present is along US 15/US 29 constituting about 4% of the total AADT. For modeling purpose, this proportion of commercial vehicle trips is considered low to warrant a separate estimation of commercial vehicle trips.

6.5 MODEL CALIBRATION AND RESULTS

The calibration process is an attempt to duplicate travel for the year in which calibration data is available. The year for which data is available is termed the "base year", and for the present study, the base year is 2011. Base year observed traffic counts shown earlier in Figure 11 under Section 5.3 were used in the calibration. Predicted traffic flows were compared with observed volumes. Result of model correlation is depicted in Figure 14, which shows the closeness of predicted volumes to observed volumes.

Figure 15 presents the modeled base year (2011) traffic on NBSD's roadways.

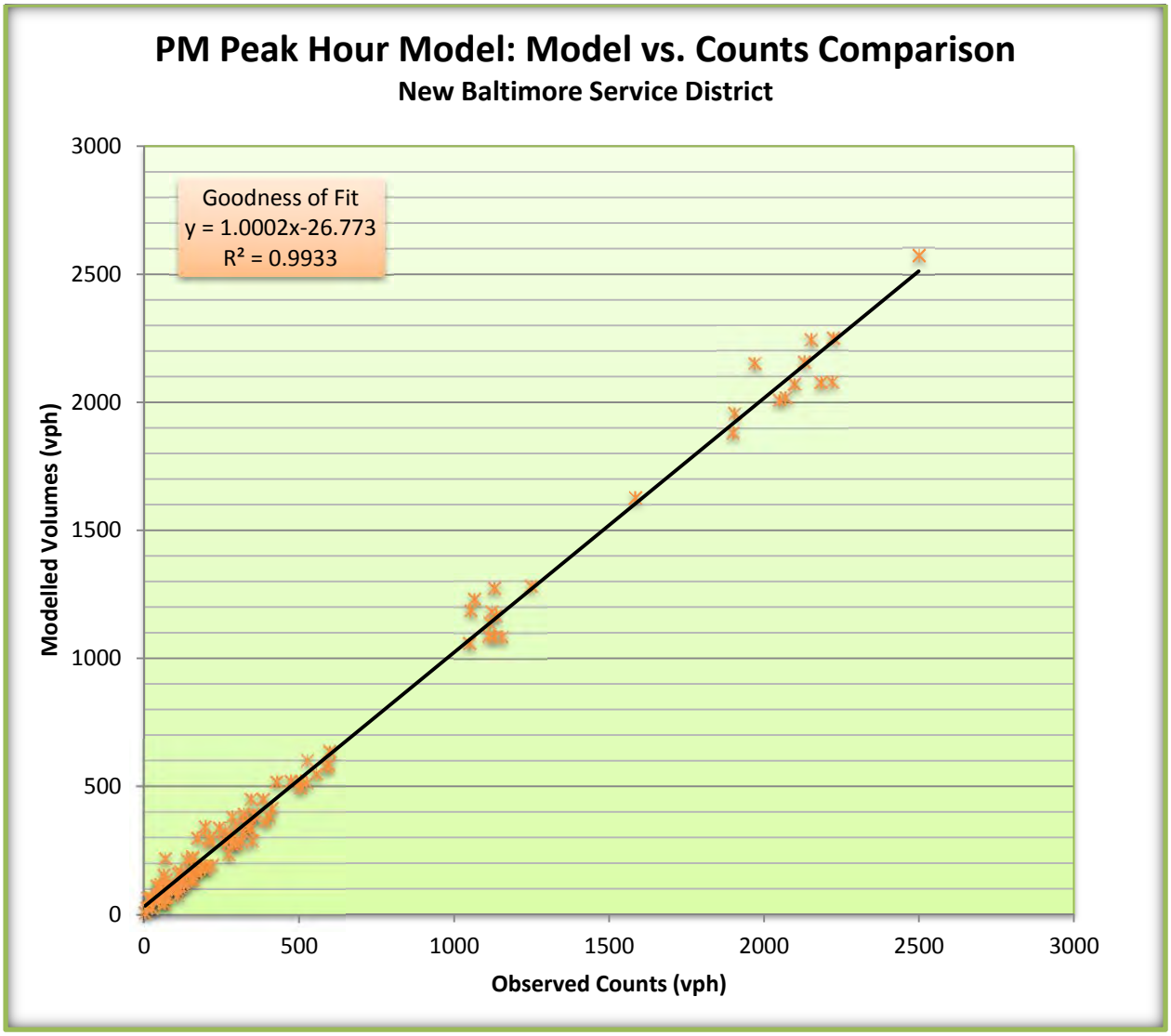

FIGURE 14: MODEL VOLUMES VERSUS OBSERVED TRAFFIC VOLUMES

FIGURE 15: BASE YEAR (2011) MODEL VOLUMES

7.0 FORECASTS

7.1 FORECAST PROCESS

Forecast traffic volumes are based upon projected changes in land use, changes in interaction with the area outside of the model, changes in travel behavior, and changes in the transportation system. Typically, as the number of households and jobs increase, the traffic will increase as well. The forecast process requires the projected housing units and projected employees by land use classification. It also requires a forecast of interaction with the area outside of the models. Information is needed to project the trips that enter and leave the model area. Finally, any planned transportation improvement projects should be included to properly assess the future operation of the transportation system.

7.2 LAND USE FORECASTS

As described in Section 4.6, Fauquier County staff provided land use forecasts by traffic analysis zone for the year 2031. Forecast land use by TAZ is given in tabular in Appendix B.

Trips were generated for the forecast year with the same rates used in 2011. This assumes that the trip generation rates that were calibrated in 2011 will still apply in the future.

7.3 EXTERNAL GROWTH FORECASTS

Typically external growth is based upon trends analysis. VDOT historical counts along US 15/29, US 215 and Dumfries Road were used to develop growth factors. Figure 16 shows the 20-year growth factors at major external stations. Once the forecast external origins and destinations were computed, the totals were checked for each trip purpose. Any adjustments to provide a balance of origins and destinations were made to internal zones only. The differences were averaged for each trip purpose.

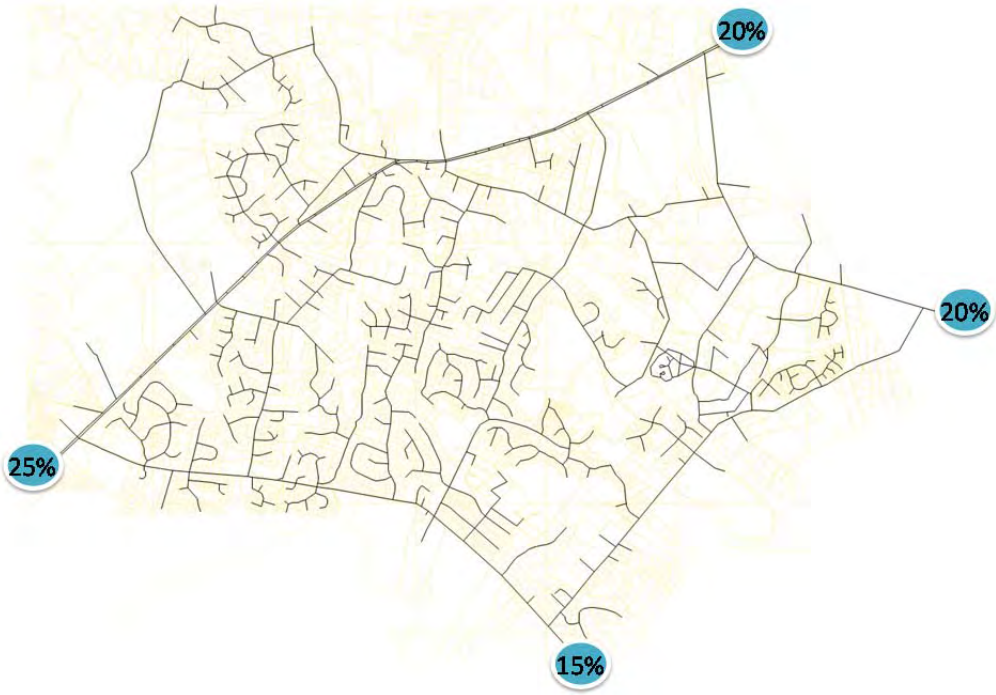

FIGURE 16: 20-YEAR TRAFFIC GROWTH AT MAJOR EXTERNAL ZONES

7.4 FORECAST TRAFFIC VOLUMES

A map showing the forecast 2031 traffic volumes on the NBSD existing road network is shown on Figure 17. Over the next two decades various improvements to the existing roadway system are anticipated. Committed improvements depicted in Figure 18 are described in the following section. Predicted traffic volumes on the NBSD network that includes anticipated roadway improvements are shown in Figure 19.

7.5 TRANSPORTATION SYSTEM IMPROVEMENTS

Different sets of improvements and new connections can be made in the transportation network and analyzed. For the NBSD network, improvements were coded using the same link and node specifications as described previously in the Network Characteristics section. Capacities for both links and nodes were re-computed when any modifications were made that would affect the capacities. Multi-Point Assignment (MPA) equivalencies were only revised when access points changed due to modifications in the network. The model was then run with all the same distribution and assignment parameters as used in the calibration.

Future Network: Committed Projects + Additional Improvements (Alternative 1)

Figure 18 shows committed roadway improvements while Figure 19 depicts committed plus additional improvements (Alternative 1) within the NBSD model area. The committed improvements that are currently coded in VISUM include some of the listed improvements in Appendix B. The proposed "power T" at the intersection of US 29 and Vint Hill Road where the southbound right turn from US 29 gets to keep rolling without a signal while the other movements are signalized, could not be represented in VISUM. The projects coded in VISUM include:

- Brookside Parkway to Vint Hill Parkway -2 lanes.
- Vint Hill Parkway from Watson Drive to Brookside Pkwy- 2 lanes
- Vint Hill Parkway from Watson Drive to Rt 215 - 4 lanes
- Aiken connection to Brookside Parkway
- US 15-29/ Rt. 600: crossover closed and signal is removed; Rt. 600 North connected to Cross Creek Blvd/ Roundabout; Rt. 600 south (right-in/ right-out) – Improvement # 4A
- US 15-29/ Cross Creek Blvd Roundabout (Improvement # 4**B**).
- US 15-29? Rt. 676 Roundabout (Improvement # 5)
- Rt. 600/676 Roundabout (Improvement # 7)
- Full signal at the Rt. 605/676 intersection (Improvement # 13)
- Signal at the Rt. 605/602 intersection (Improvement # 14)
- Signal at the Rt. 602/Grapewood Drive/ Academic Blvd. intersection (Improvement # 18)

Figure 20 shows a map of predicted volumes under a future alternative 1 road network.

Future Network: Committed Projects + Additional Improvements (Alternative 2)

Alternative roadway improvements are further considered in addition to those included under alternative 1 scenario. Appendix B shows a map of the proposed New Baltimore Road Network that were coded in VISUM and shown in Figure 21. Predicted volumes under a future alternative 2 road network is depicted in Figure 22..

8.0 CONCLUSIONS

The New Baltimore Service District model has been calibrated to reasonably replicate existing conditions. It is ready for application and use. The model has been used to test alternative scenarios of future growth in land use developments and roadway improvements within the district.

As with all models, this is a tool to evaluate the impacts of future change. The results should be used with caution. A model is only as good as the data and assumptions that were used to develop the model and the forecasts of the future year inputs. Caution should especially be used when evaluating the future. Will the forecast land use really occur as projected? Will travel behavior stay essentially the same? Should adjustments be made to account for these changes? Likewise, when the model is used for a specific study, the results should be examined and analyzed. If conditions have changed in an area or the existing data is out of date, compensation or improvements should be made in the model and its results. The calibration or base year model can and should be updated if conditions are found to be different than originally inventoried or assumed. It is not uncommon for a model to be re-evaluated as it is used and applied. The goal of the model is to provide future forecasts using available information. As the available information changes or changed conditions are found the model should be updated to reflect these changed conditions.

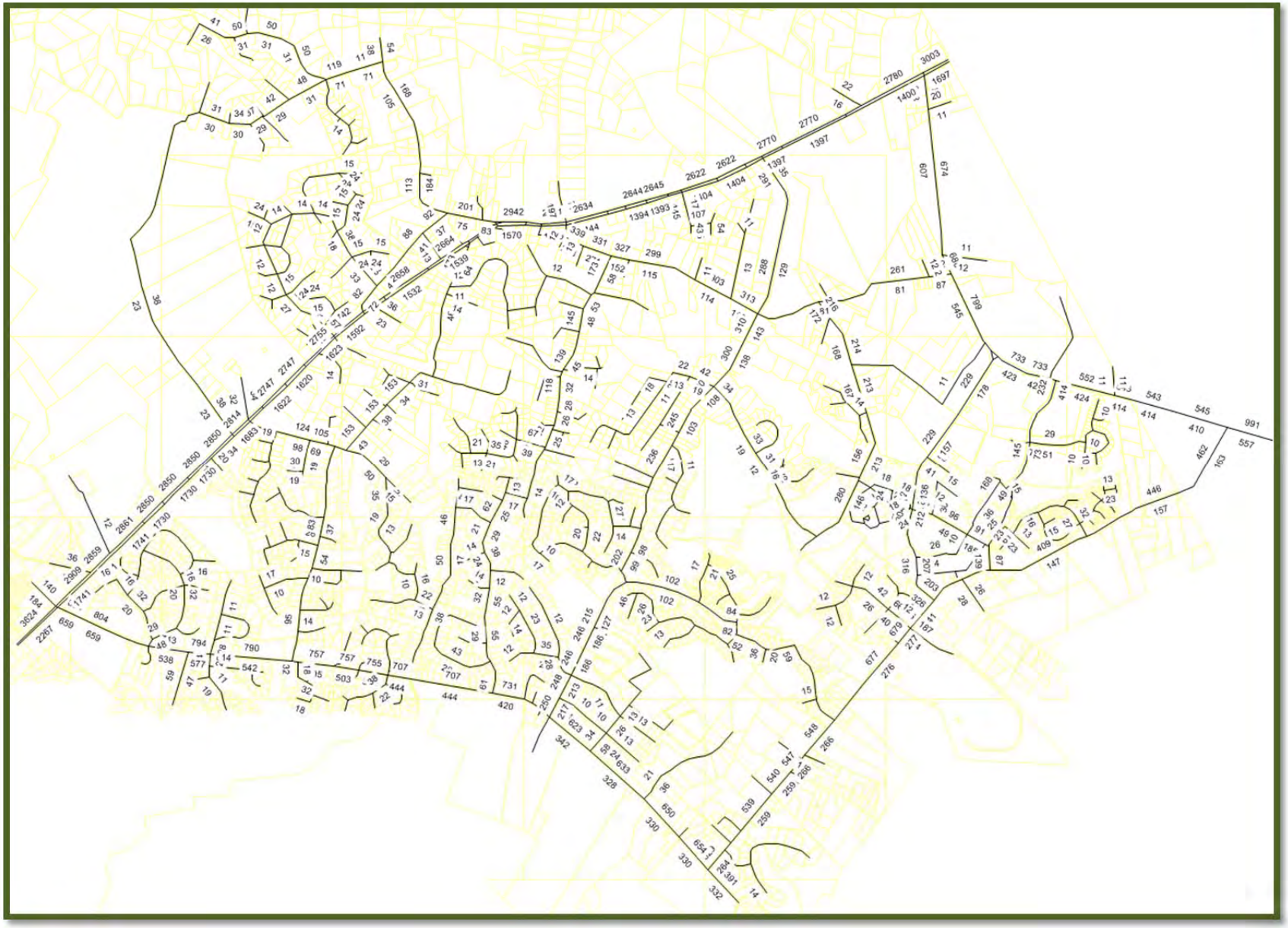

FIGURE 17: FUTURE 2031 MODEL VOLUMES ON BASE NETWORK

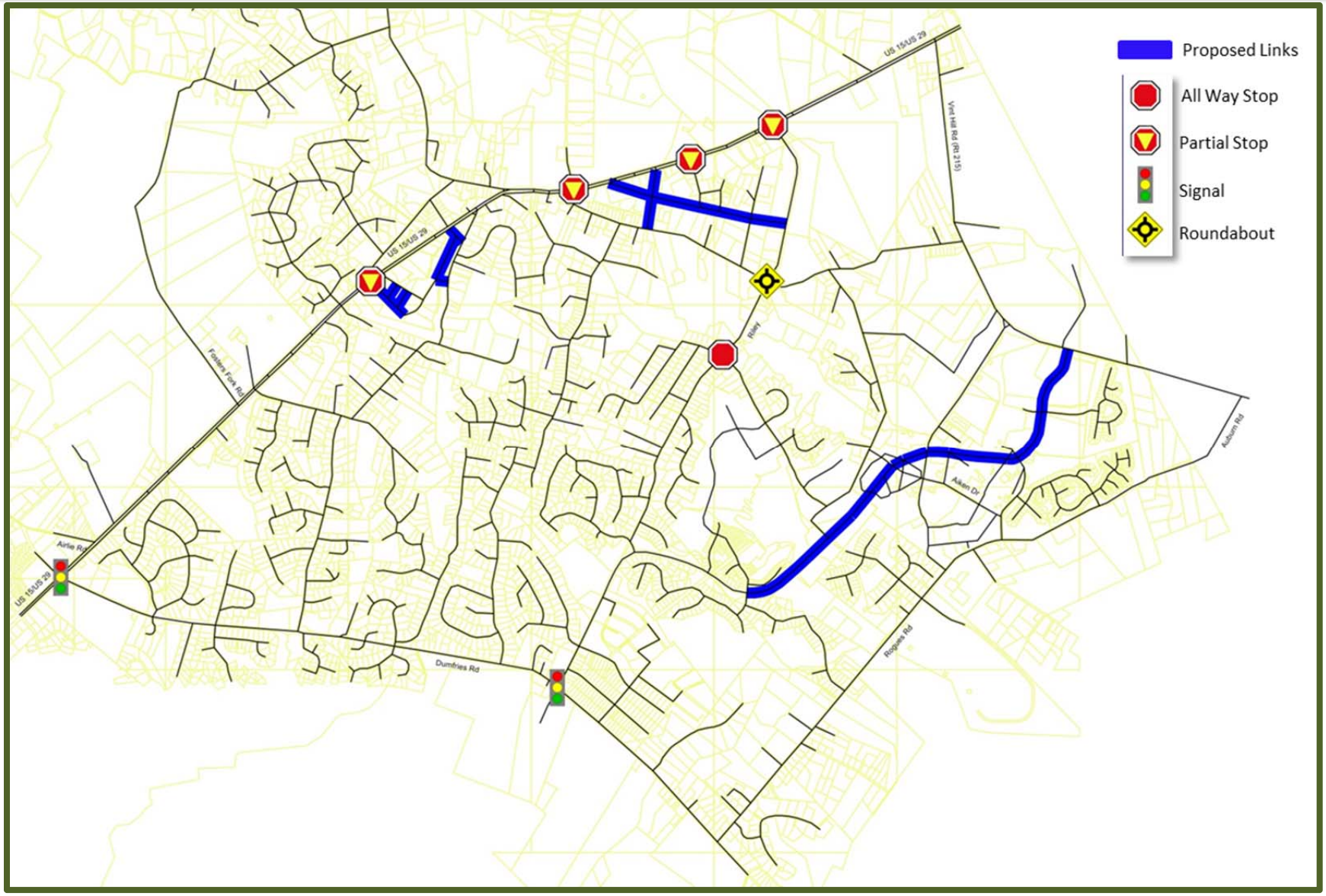

FIGURE 18: FUTURE 2031 COMMITTED NETWORK

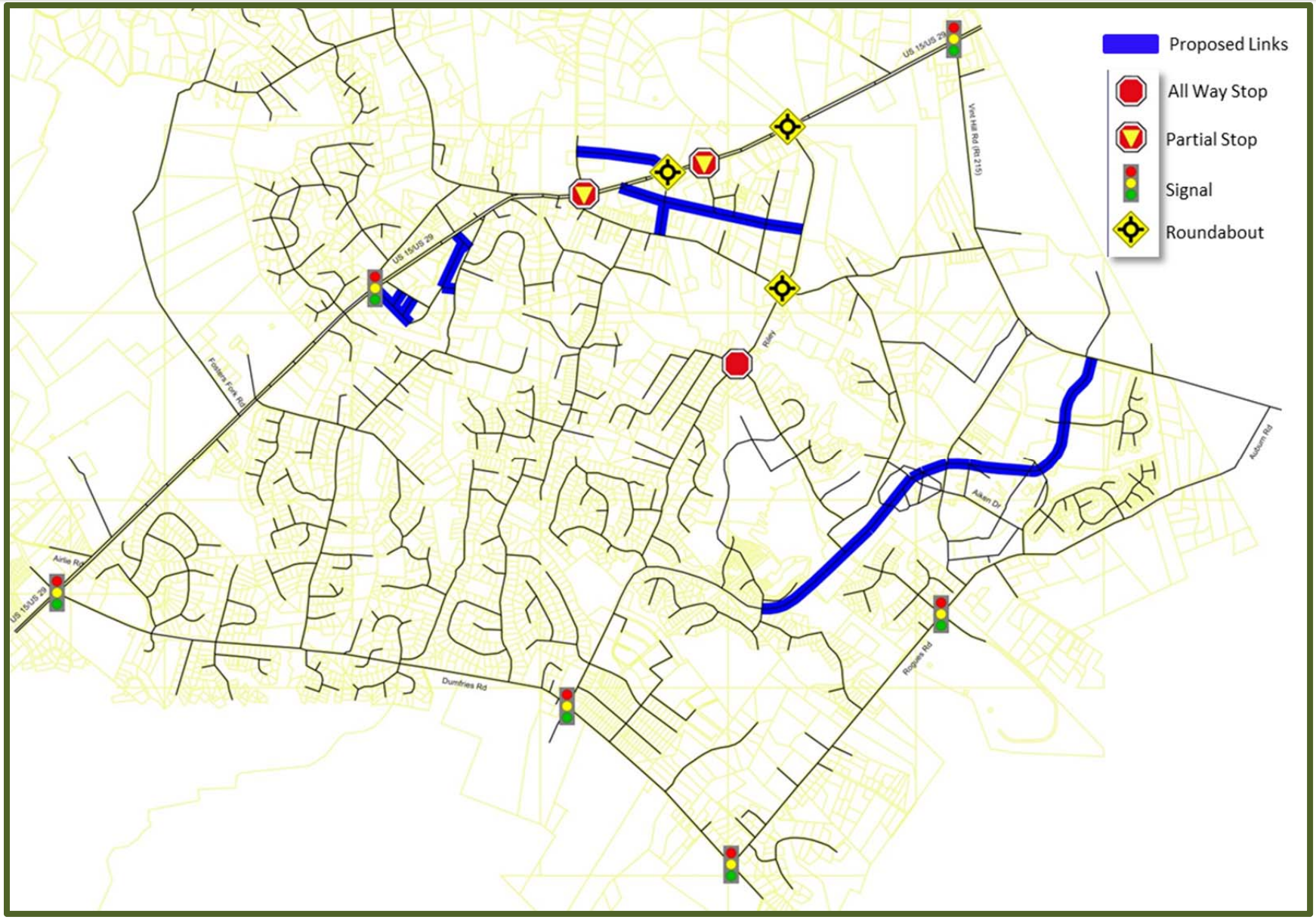

FIGURE 19: FUTURE 2031 ALTERNATIVE 1 NETWORK (COMMITTED PLUS ADDITIONAL PROPOSED IMPROVEMENTS)

FIGURE 20: FUTURE 2031 MODEL VOLUMES ON ALTERNATIVE 1 NETWORK

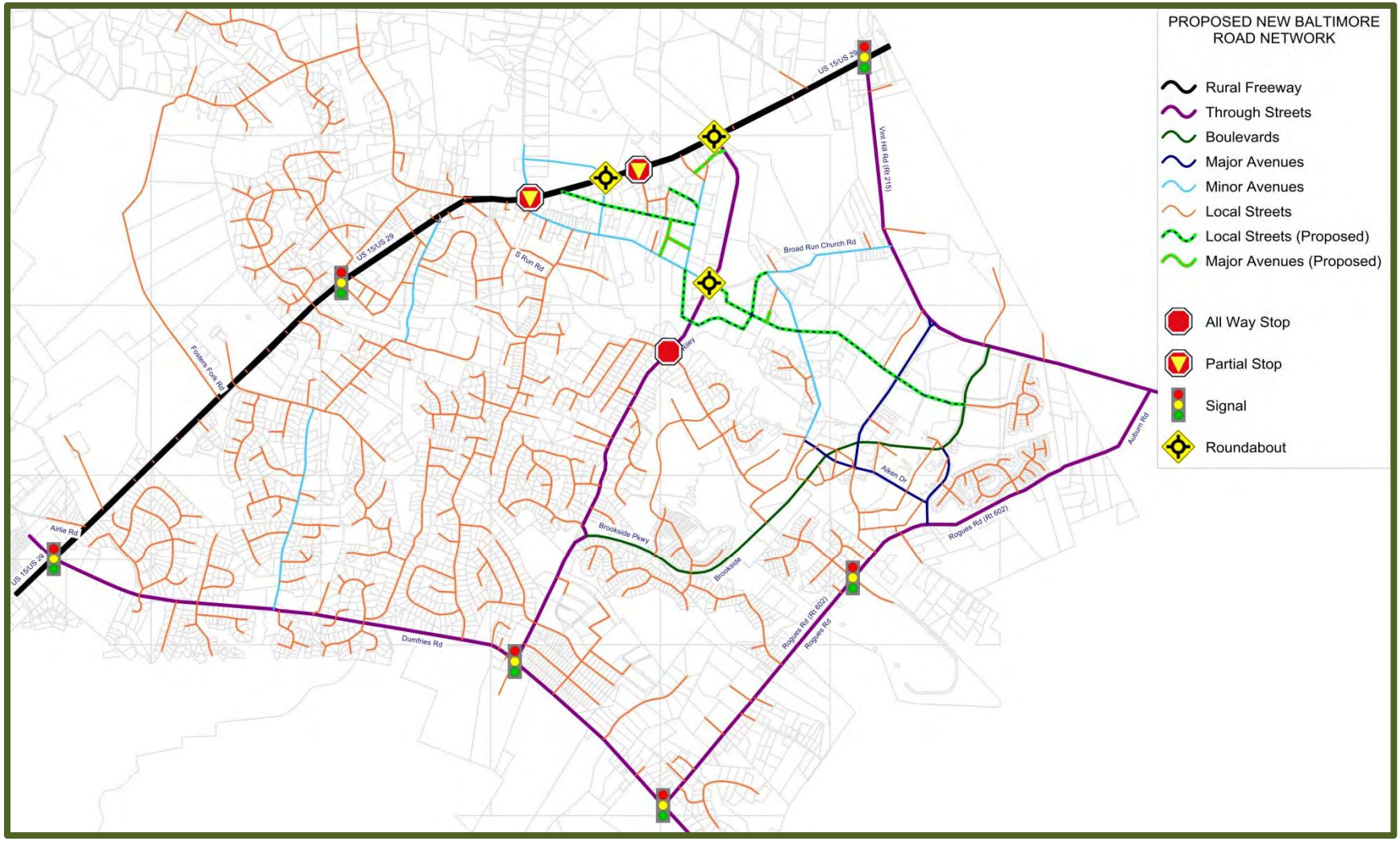

FIGURE 21: FUTURE 2031 ALTERNATIVE 2 (PROPOSED NEW BALTIMORE ROAD NETWORK)

FIGURE 22: FUTURE 2031 MODEL VOLUMES ON ALTERNATIVE 2 NETWORK

APPENDIX

Appendix A – 2011 and 2031 Land Use by Traffic Analysis Zones

Appendix B – Proposed Roadway Improvements

APPENDIX A

YEAR 2011 AND YEAR 2031
LAND USE BY TRAFFIC ANALYSIS ZONES

TAZ	Dwelling Units		Employment		School Enrollment	
	2011	2031	2011	2031	2011	2031
1	29	30	0	0	0	0
2	38	43	10	10	0	0
3	11	22	0	0	0	0
4	37	38	3	3	0	0
5	163	163	19	19	0	0
6	2	2	11	11	0	0
7	0	0			501	501
8	117	117	11	11	0	0
9	42	43	0	0	0	0
10	0	0	0	0	0	0
11	52	52	3	3	0	0
12	49	51	3	3	0	0
13	65	66	1	1	0	0
14	49	52	0	0	0	0
15	19	21	4	4	0	0
16	46	47	3	3	0	0
17	52	55	2	2	0	0
18	25	27	0	0	0	0
19	84	85	1	1	0	0
20	38	41	0	0	0	0
21	36	36	6	6	0	0
22	47	48	0	0	0	0
23	32	38	0	0	0	0
24	29	30	10	10	0	0
25	23	27	4	4	0	0
26	21	22	6	6	0	0
27	1	3	137	287	0	0
28	13	15	0	0	0	0
29	18	27	0	0	0	0
30	55	55	4	1	0	0
31	49	53	3	3	0	0
32	13	15	0	0	0	0
33	87	87	4	4	0	0
34	0	0			606	606
35	80	80	8	8	0	0
36	9	11	0	0	0	0
37	101	102	0	0	0	0
38	15	23	7	7	0	0
39	197	337	5	5	0	0
40	56	75	4	4	0	0
41	58	77	0	0	0	0
42	102	104	10	10	0	0
43	32	33	5	5	0	0
44	2	379	0	0	0	0
45	25	25	0	0	0	0

TAZ	Dwelling Units		Employment		School Enrollment	
	2011	2031	2011	2031	2011	2031
46	26	28	4	4	0	0
47	33	33	0	0	0	0
48	12	12	1	1	0	0
49	24	24	101	379	0	0
50	0	0	243	243	0	0
51	0	0	48	48	0	0
52	0	0	337	337	0	0
53	0	0	274	384	0	0
54	0	0	142	212	0	0
55	0	0	232	232	0	0
56	222	222	0	0	0	0
57	78	78	0	0	0	0
58	0	0	0	564	0	0
59	0	0	0	143	0	0
60	31	32	1	1	0	0
61	42	53	0	0	0	0
62	1	2		10	462	462
63	8	26	0	0	0	0
64	19	23	0	0	0	0
65	15	16	61	61	0	0
66	14	17	117	613	0	0
67	1	1	391	391	0	0
68	5	5	7	7	0	0
69	21	31	4	4	0	0
70	0	12	0	30	0	0
71	32	33	0	0	0	0
72	27	28	0	0	0	0
73	51	51	3	3	0	0
74	17	17	0	0	0	0
75	40	43	1	1	0	0
76	48	50	4	4	0	0
77	17	17	1	1	0	0
78	25	25	0	0	0	0
79	0	0	0	169	0	0
80	103	103	0	0	0	0
81	22	22	0	0	0	0
82	191	191	0	0	0	0
83	41	41	0	0	0	0
84	28	28	15	15	0	0
85	1	1	57	57	0	0
86	7	7	22	22	0	0
87	14	14	2	2	0	0
88	17	17	0	0	0	0
89	30	30	0	0	0	0
90	14	14	0	0	0	0

APPENDIX B – PROPOSED ROADWAY IMPROVEMENTS (ALTERNATIVE 1)

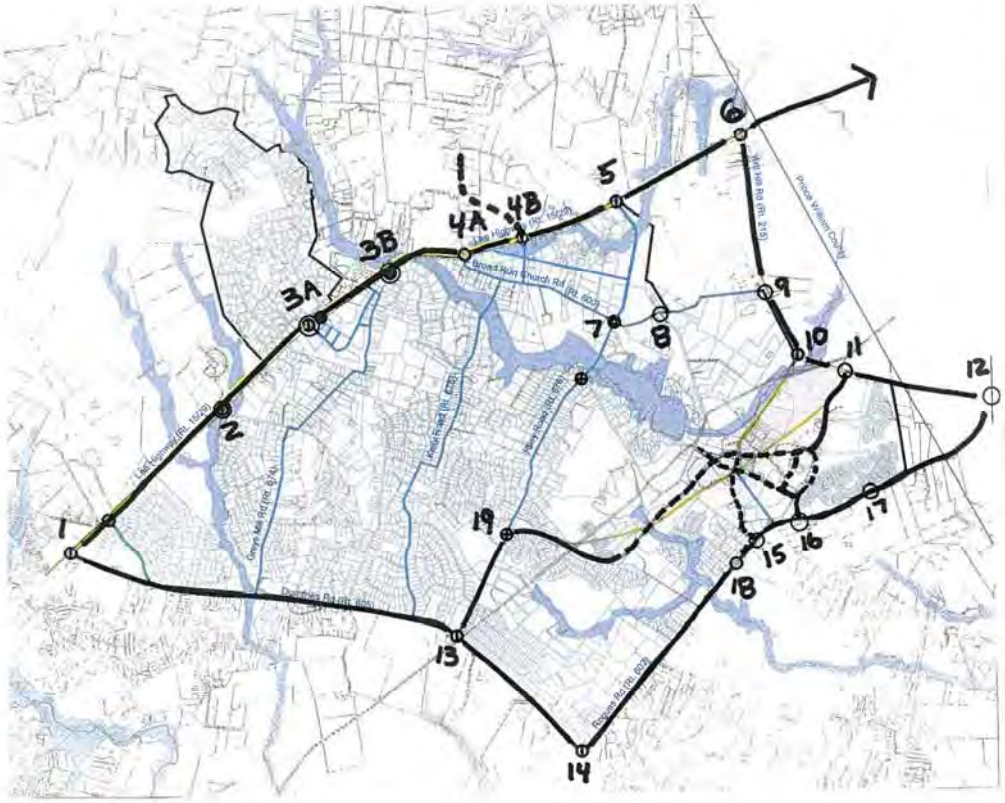

LEGEND

#	PROPOSED IMPROVEMENT DESCRIPTIONS (2031)
1	U.S. 15-29/Rt. 605 - Signalized Intersection
2	Baldwin Road (Not Signalized)
3A	U.S. 15-29/Rt. 693 (Old Alexandria Turnpike) – Signal Intersection
3B	U.S. 15-29/Rt. 674 – Intersection Closed
4A	U.S. 15-29/Rt. 600: Crossover closed and signal is removed; Rt. 600 North connected to Cross Creek Blvd/Roundabout; Rt. 600 South (right in/right out)
4B	U.S. 15-29/Cross Creek Boulevard – Roundabout
5	U.S. 15-29/Rt. 676 - Roundabout
6	U.S. 15-29/Rt. 215 – Continuous Green T
7	Rt. 600/676 – Roundabout
8	Rt. 600/Rt. 793 – Standard Intersection (Not Signalized)
9	Rt. 215/Rt. 600 – Standard Intersection (Not Signalized)
10	Rt. 215/Rt. 652 – Standard Intersection (Not Signalized)
11	Rt. 215/Vint Hill Parkway – Standard Intersection (Not Signalized)
12	Rt. 215/Rt. 602 – Standard Intersection (Prince William County - Not Signalized)
13	Rt. 605/Rt. 676 – Signalized Intersection
14	Rt. 605/Rt. 602 – Signalized Intersection
15	Rt. 602/Finch Lane (Not Signalized)
16	Rt. 602/Watson Road (Not Signalized)
17	Rt. 602/Cray Drive (Not Signalized)
18	Rt. 602/Grapewood Drive/Academic Boulevard – Signalized Intersection
19	Rt. 676/Allison Marshall Drive/Brookside Parkway (Not Signalized)

NBSD Citizen Planning Committee (Recommended) 3-21-12 Meeting

APPENDIX B – PROPOSED ROADWAY IMPROVEMENTS (ALTERNATIVE 2)

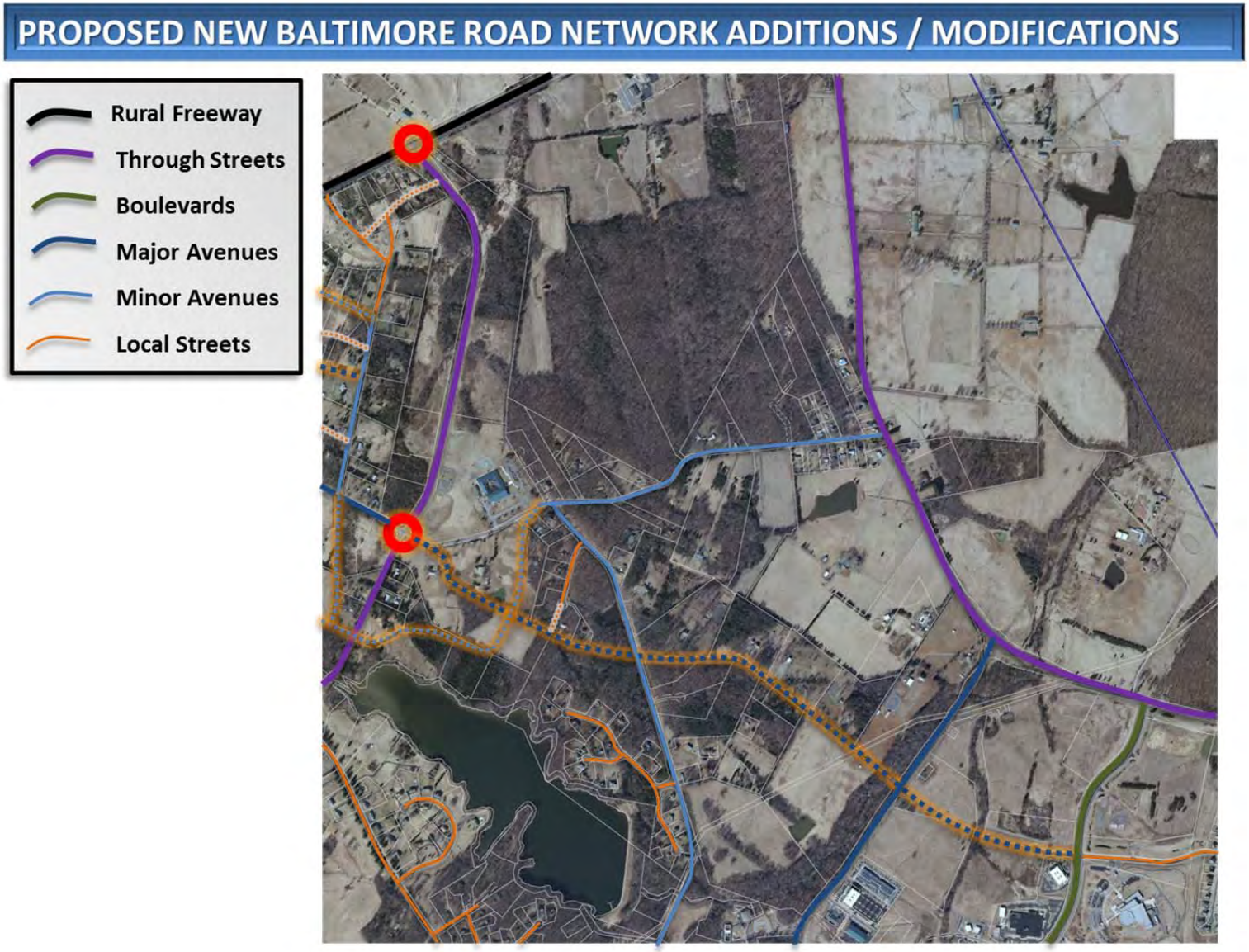

Appendix B Peak Hour Turning Movement Counts

AM Peak Turning Movement Study

Vehicle Volumes

Location: US Route 15/29 & SR 605 (Dumfries Rd./Colonial Rd.) **County/Area:** Fauquier-Warrenton

Date Surveyed: Tuesday-March 22, 2011 **Weather:** Cool/Sunny/Dry

	US 15/29			US 15/29			SR 605-Dumfries Rd.			SR 605-Colonial Rd.			
	From North			From South			From East			From West			
End Time	Left	Thru	Right	Left	Thru	Right	Left	Thru	Right	Left	Thru	Right	Int. Total
6:15	2	101	2	8	464	52	24	1	25	26	4	2	711
6:30	0	119	3	5	487	49	35	1	17	18	3	1	738
6:45	8	149	3	7	488	85	28	1	12	23	7	3	814
7:00	7	144	2	9	514	84	61	4	18	18	3	6	870
7:15	8	159	1	8	453	120	63	9	11	22	14	6	874
7:30	3	170	3	12	498	91	86	6	15	22	11	10	927
7:45	2	220	2	9	450	90	97	8	15	23	10	7	933
8:00	4	272	3	9	453	82	95	9	14	15	6	4	966
8:15	8	224	2	10	422	80	92	5	10	8	13	5	879
8:30	9	260	3	5	394	79	118	10	8	15	6	9	916
8:45	2	286	4	6	353	54	120	6	11	14	5	8	869
9:00	6	249	1	8	365	60	84	6	7	16	2	11	815
Total	59	2353	29	96	5341	926	903	66	163	220	84	72	10312

Pedestrian Volumes

Location: US Route 15/29 & SR 605 (Dumfries Rd./Colonial Rd.) **County/Area:** Fauquier-Warrenton

Date Surveyed: Tuesday-March 22, 2011 **Weather:** Cool/Sunny/Dry

	US 15/29			US 15/29			SR 605-Dumfries Rd.			SR 605-Colonial Rd.			
	Across North Leg			Across South Leg			Across East Leg			Across West Leg			
End Time	Pedestrians			Pedestrians			Pedestrians			Pedestrians			Int. Total
6:15		0			0			0			0		0
6:30		0			0			0			0		0
6:45		0			0			0			0		0
7:00		0			0			0			0		0
7:15		0			0			0			0		0
7:30		0			0			0			0		0
7:45		0			0			0			0		0
8:00		0			0			0			0		0
8:15		0			0			0			0		0
8:30		0			0			0			0		0
8:45		0			0			0			0		0
9:00		0			0			0			0		0
Total		0			0			0			0		0

AM Peak Turning Movement Study

Vehicle Volumes

Location: US 15/29-SR 600 (Beverleys Mill Rd./Broad Run Church Rd.) **County/Area:** Fauquier-Warrenton

Date Surveyed: Tuesday-March 22, 2011 **Weather:** Cool/Sunny/Dry

	US 15/29			US 15/29			SR 600-Broad Run Ch Rd.			SR 600-Beverley's Mill Rd.			
	From North			From South			From East			From West			
End Time	Left	Thru	Right	Left	Thru	Right	Left	Thru	Right	Left	Thru	Right	Int. Total
6:15	2	90	0	3	452	26	7	3	14	2	1	2	602
6:30	2	119	0	7	467	36	13	2	12	1	1	6	666
6:45	0	144	0	9	544	34	8	2	15	6	5	3	770
7:00	2	158	2	13	573	40	13	3	19	3	5	3	834
7:15	4	150	1	10	488	59	12	4	14	2	10	6	760
7:30	0	174	1	16	522	41	26	7	17	5	9	4	822
7:45	2	229	8	13	485	45	25	10	16	1	7	7	848
8:00	2	217	6	12	445	43	21	3	13	5	6	6	779
8:15	1	229	1	12	477	50	27	8	19	2	8	3	837
8:30	2	204	0	11	405	62	47	5	5	2	4	5	752
8:45	4	216	4	10	373	23	40	2	18	4	3	7	704
9:00	5	191	1	4	390	23	27	3	17	2	1	6	670
Total	26	2121	24	120	5621	482	266	52	179	35	60	58	9044

Pedestrian Volumes

Location: US 15/29-SR 600 (Beverleys Mill Rd./Broad Run Church Rd.) **County/Area:** Fauquier-Warrenton

Date Surveyed: Tuesday-March 22, 2011 **Weather:** Cool/Sunny/Dry

	US 15/29			US 15/29			SR 600-Broad Run Ch Rd.			SR 600-Beverley's Mill Rd.			
	Across North Leg			Across South Leg			Across East Leg			Across West Leg			
End Time	Pedestrians			Pedestrians			Pedestrians			Pedestrians			Int. Total
6:15		0			0			0			0		0
6:30		0			0			0			0		0
6:45		0			0			0			0		0
7:00		0			0			0			0		0
7:15		0			0			0			0		0
7:30		0			0			0			0		0
7:45		0			0			0			0		0
8:00		0			0			0			0		0
8:15		0			0			0			0		0
8:30		0			0			0			0		0
8:45		0			0			0			0		0
9:00		0			0			0			0		0
Total		0			0			0			0		0

AM Peak Turning Movement Study

Vehicle Volumes

Location: US 15/29-SR 673 (Baldwin St.-Suffield Ln.) **County/Area:** Fauquier-New Baltimore

Date Surveyed: Tuesday-March 29, 2011 **Weather:** Cold/Sunny/Dry

	US 15/29 From North			US 15/29 From South			SR-673-Baldwin St. From East			Suffield Lane From West			
End Time	**Left**	**Thru**	**Right**	**Left**	**Thru**	**Right**	**Left**	**Thru**	**Right**	**Left**	**Thru**	**Right**	**Int. Total**
6:45	1	161	1	10	518	1	4	0	8	0	0	2	706
7:00	1	189	1	4	528	3	0	0	14	1	0	6	747
7:15	3	179	0	1	522	1	5	0	12	3	0	3	729
7:30	2	190	1	0	516	5	7	0	16	1	0	1	739
7:45	3	231	0	2	549	9	8	1	8	1	0	3	815
8:00	2	249	3	3	491	9	13	0	12	1	0	3	786
8:15	2	257	2	0	477	6	7	0	10	2	0	1	764
8:30	5	249	0	6	417	4	6	0	9	1	0	3	700
8:45	2	237	1	1	426	4	7	0	3	2	0	2	685
9:00	1	239	1	5	377	3	11	0	8	4	0	1	650
Total	22	2181	10	32	4821	45	68	1	100	16	0	25	7321

Pedestrian Volumes

Location: US 15/29-SR 673 (Baldwin St.-Suffield Ln.) **County/Area:** Fauquier-New Baltimore

Date Surveyed: Tuesday-March 29, 2011 **Weather:** Cold/Sunny/Dry

	US 15/29 Across North Leg			US 15/29 Across South Leg			SR 673-Baldwin St. Across East Leg			Suffield Lane Across West Leg			
End Time	**Pedestrians**			**Pedestrians**			**Pedestrians**			**Pedestrians**			**Int. Total**
6:45		0			0			0			0		0
7:00		0			0			0			0		0
7:15		0			0			0			0		0
7:30		0			0			0			0		0
7:45		0			0			0			0		0
8:00		0			0			0			0		0
8:15		0			0			0			0		0
8:30		0			0			0			0		0
8:45		0			0			0			0		0
9:00		0			0			0			0		0
Total		0			0			0			0		0

AM Peak Turning Movement Study

Vehicle Volumes

Location: US 15/29-SR 674 (Gray's Mill Rd.) **County/Area:** Fauquier-New Baltimore

Date Surveyed: Tuesday-March 29, 2011 **Weather:** Cold/Sunny/Dry

	US 15/29			US 15/29			SR-674-Gray's Mill Rd.			NA			
	From North			From South			From East			From West			
End Time	Left	Thru	Right	Left	Thru	Right	Left	Thru	Right	Left	Thru	Right	Int. Total
6:45	1	174			533	0	3		8				719
7:00	0	166			558	0	1		8				733
7:15	1	173			551	2	3		12				742
7:30	1	211			567	1	2		12				794
7:45	1	219			538	1	2		9				770
8:00	2	220			521	0	3		10				756
8:15	2	231			508	1	5		7				754
8:30	4	239			434	1	3		13				694
8:45	6	224			430	0	5		4				669
9:00	3	243			399	2	3		10				660
Total	21	2100			5039	8	30		93				7291

Pedestrian Volumes

Location: US 15/29-SR 622 (Gray's Mill Rd.) **County/Area:** Fauquier-New Baltimore

Date Surveyed: Tuesday-March 29, 2011 **Weather:** Cold/Sunny/Dry

	US 15/29			US 15/29			SR 674-Gray's Mill Rd.			NA			
	Across North Leg			Across South Leg			Across East Leg			Across West Leg			
End Time	Pedestrians			Pedestrians			Pedestrians			Pedestrians			Int. Total
6:45		0			0			0			0		0
7:00		0			0			0			0		0
7:15		0			0			0			0		0
7:30		0			0			0			0		0
7:45		0			0			0			0		0
8:00		0			0			0			0		0
8:15		0			0			0			0		0
8:30		0			0			0			0		0
8:45		0			0			0			0		0
9:00		0			0			0			0		0
Total		0			0			0			0		0

AM Peak Turning Movement Study

Vehicle Volumes

Location: US 15/29 & SR 676 (Riley Rd.) **County/Area:** Fauquier-New Baltimore

Date Surveyed: Tuesday-March 29, 2011 **Weather:** Cold/Sunny/Dry

	US 15/29			US 15/29			SR-676-Riley Rd.			NA			
	From North			From South			From East			From West			
End Time	Left	Thru	Right	Left	Thru	Right	Left	Thru	Right	Left	Thru	Right	Int. Total
6:45	7	151			570	1	1		22				752
7:00	6	177			505	5	2		34				729
7:15	7	150			532	5	1		36				731
7:30	14	173			523	8	3		31				752
7:45	7	206			502	11	2		30				758
8:00	5	261			511	6	1		28				812
8:15	10	201			466	4	1		28				710
8:30	13	187			421	8	4		29				662
8:45	4	213			424	10	5		32				688
9:00	10	236			382	3	0		28				659
Total	83	1955			4836	61	20		298				7253

Pedestrian Volumes

Location: US 15/29 & SR 676 (Riley Rd.) **County/Area:** Fauquier-New Baltimore

Date Surveyed: Tuesday-March 29, 2011 **Weather:** Cold/Sunny/Dry

	US 15/29			US 15/29			SR-676-Riley Rd.			NA			
	Across North Leg			Across South Leg			Across East Leg			Across West Leg			
End Time	Pedestrians			Pedestrians			Pedestrians			Pedestrians			Int. Total
6:45		0			0			0			0		0
7:00		0			0			0			0		0
7:15		0			0			0			0		0
7:30		0			0			0			0		0
7:45		0			0			0			0		0
8:00		0			0			0			0		0
8:15		0			0			0			0		0
8:30		0			0			0			0		0
8:45		0			0			0			0		0
9:00		0			0			0			0		0
Total		0			0			0			0		0

AM Peak Turning Movement Study

Vehicle Volumes

Location: US 15/29 & SR 215 (Vint Hill Rd.) **County/Area:** Fauquier-New Baltimore

Date Surveyed: Wednesday-March 30, 2011 **Weather:** Cool/Cloudy/Dry

	US 15/29			US 15/29			SR-215-Vint Hill Rd.			Private Entrance			
	From North			From South			From East			From West			
End Time	Left	Thru	Right	Left	Thru	Right	Left	Thru	Right	Left	Thru	Right	Int. Total
6:45	43	155	0		514	27	15	0	61	0	0	0	815
7:00	49	136	0		513	31	12	0	53	0	0	0	794
7:15	41	160	0		537	32	9	0	55	0	0	0	834
7:30	48	196	0		469	38	15	0	75	0	0	0	841
7:45	53	242	1		513	38	31	0	75	0	0	0	953
8:00	36	241	0		452	27	17	0	98	0	0	0	871
8:15	54	191	1		463	21	15	1	60	0	1	0	807
8:30	48	164	2		419	30	27	0	67	0	0	0	757
8:45	43	223	1		366	29	17	0	60	0	1	2	742
9:00	65	194	0		383	23	14	0	74	0	0	0	753
Total	480	1902	5		4629	296	172	1	678	0	2	2	8167

Pedestrian Volumes

Location: US 15/29 & SR 215 (Vint Hill Rd.) **County/Area:** Fauquier-New Baltimore

Date Surveyed: Wednesday-March 30, 2011 **Weather:** Cool/Cloudy/Dry

	US 15/29			US 15/29			SR-215-Vint Hill Rd.			Private Entrance			
	Across North Leg			Across South Leg			Across East Leg			Across West Leg			
End Time	Pedestrians			Pedestrians			Pedestrians			Pedestrians			Int. Total
6:45		0			0			0			0		0
7:00		0			0			0			0		0
7:15		0			0			0			0		0
7:30		0			0			0			0		0
7:45		0			0			0			0		0
8:00		0			0			0			0		0
8:15		0			0			0			0		0
8:30		0			0			0			0		0
8:45		0			0			0			0		0
9:00		0			0			0			0		0
Total		0			0			0			0		0

Technical Traffic services

AM Peak Hour

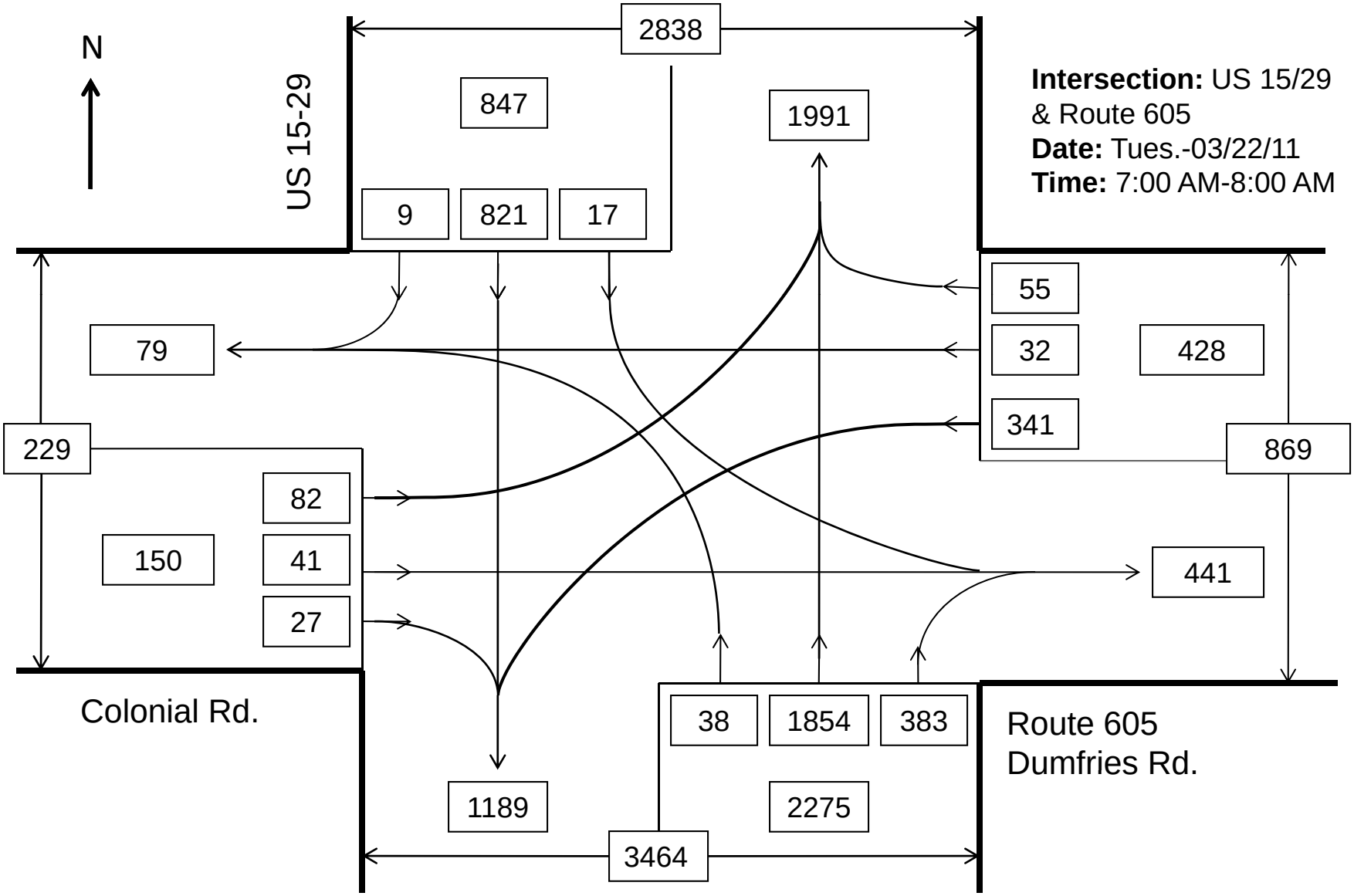

Intersection: US 15/29 & Route 605
Date: Tues.-03/22/11
Time: 7:00 AM-8:00 AM

Technical Traffic services

PM Peak Hour

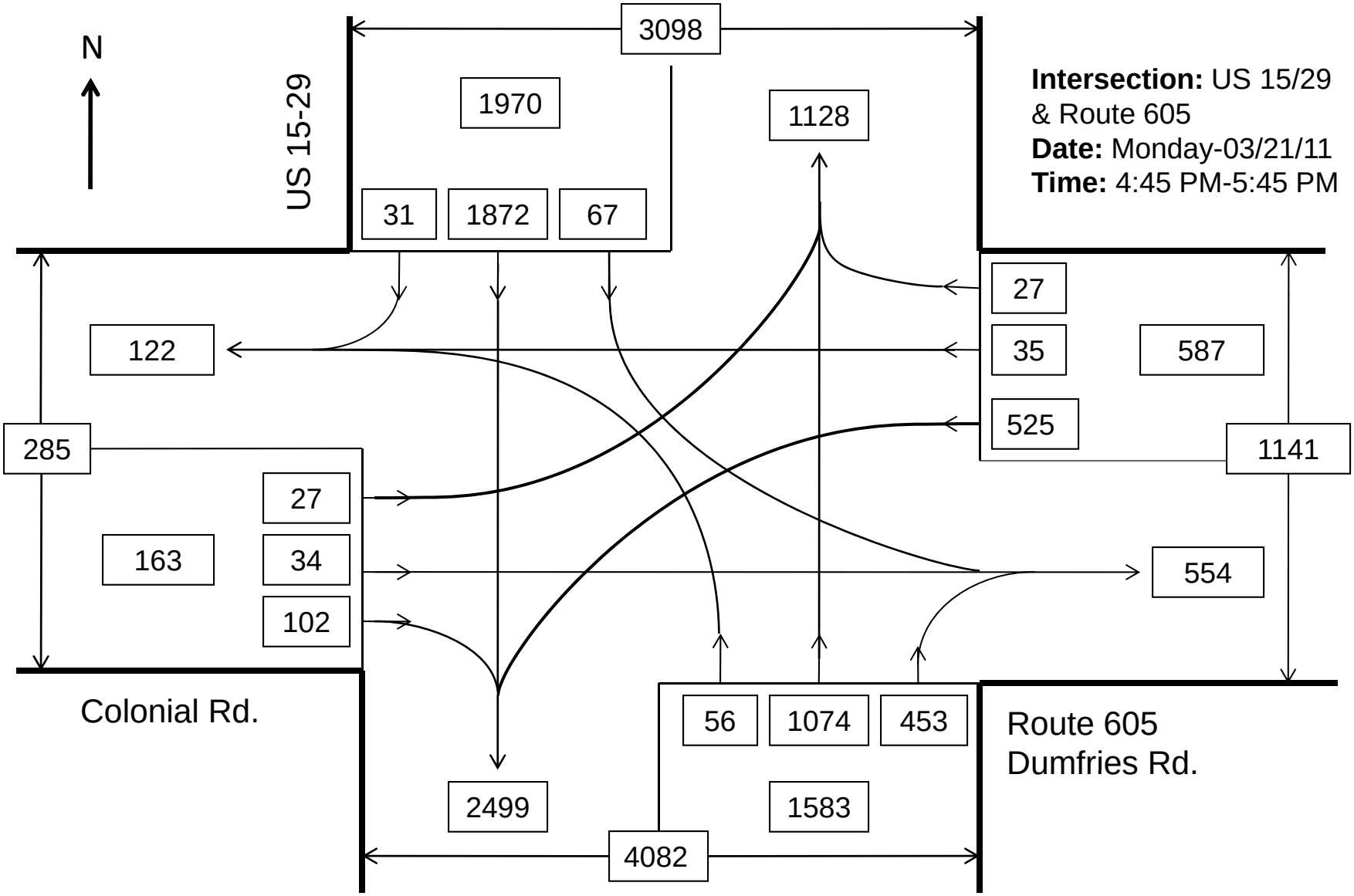

Intersection: US 15/29 & Route 605
Date: Monday-03/21/11
Time: 4:45 PM-5:45 PM

Technical Traffic services

AM Peak Hour

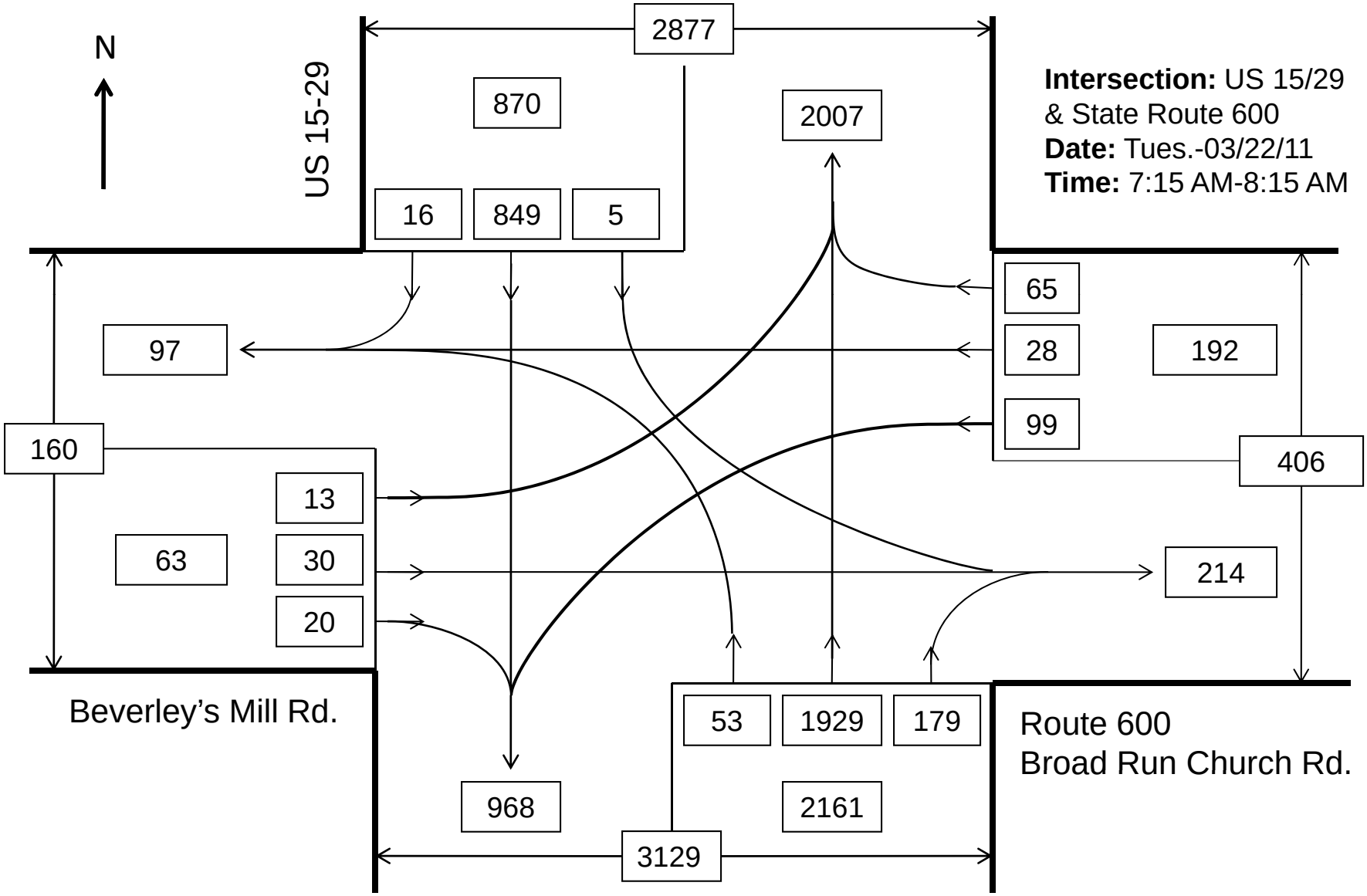

Intersection: US 15/29 & State Route 600
Date: Tues.-03/22/11
Time: 7:15 AM-8:15 AM

Technical Traffic services

PM Peak Hour

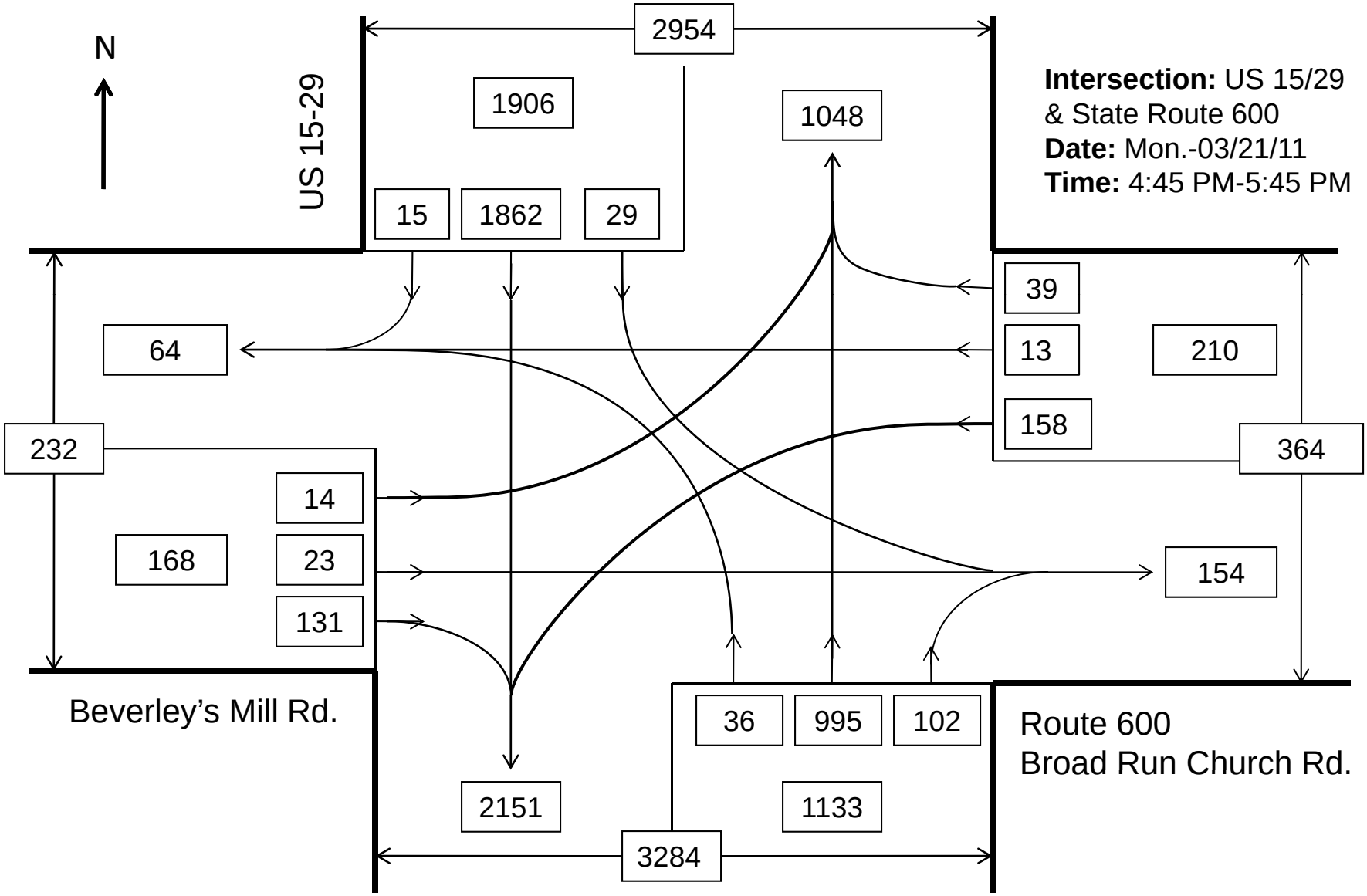

Intersection: US 15/29 & State Route 600
Date: Mon.-03/21/11
Time: 4:45 PM-5:45 PM

Technical Traffic services

AM Peak Hour

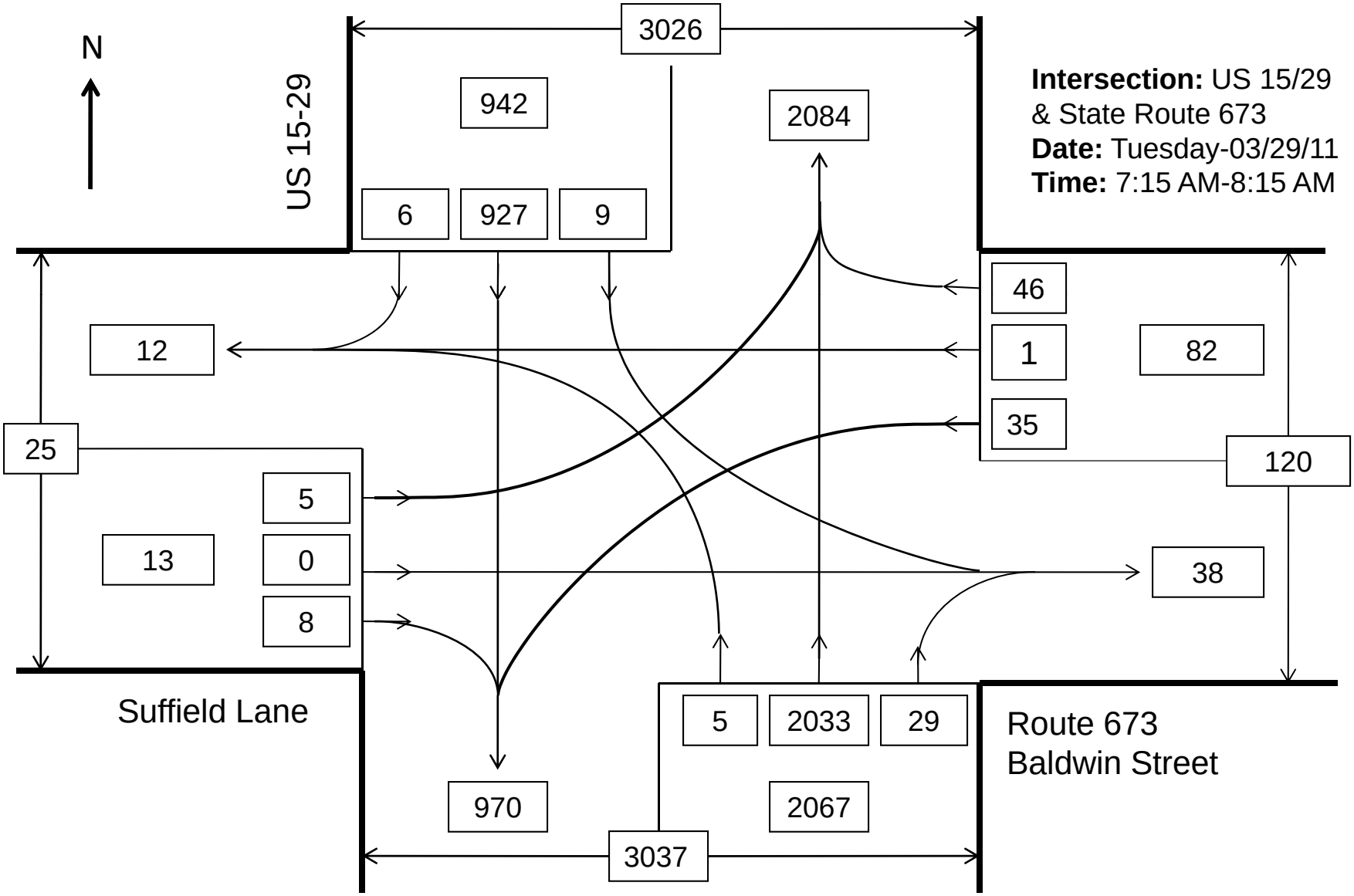

Intersection: US 15/29 & State Route 673
Date: Tuesday-03/29/11
Time: 7:15 AM-8:15 AM

Technical Traffic services

PM Peak Hour

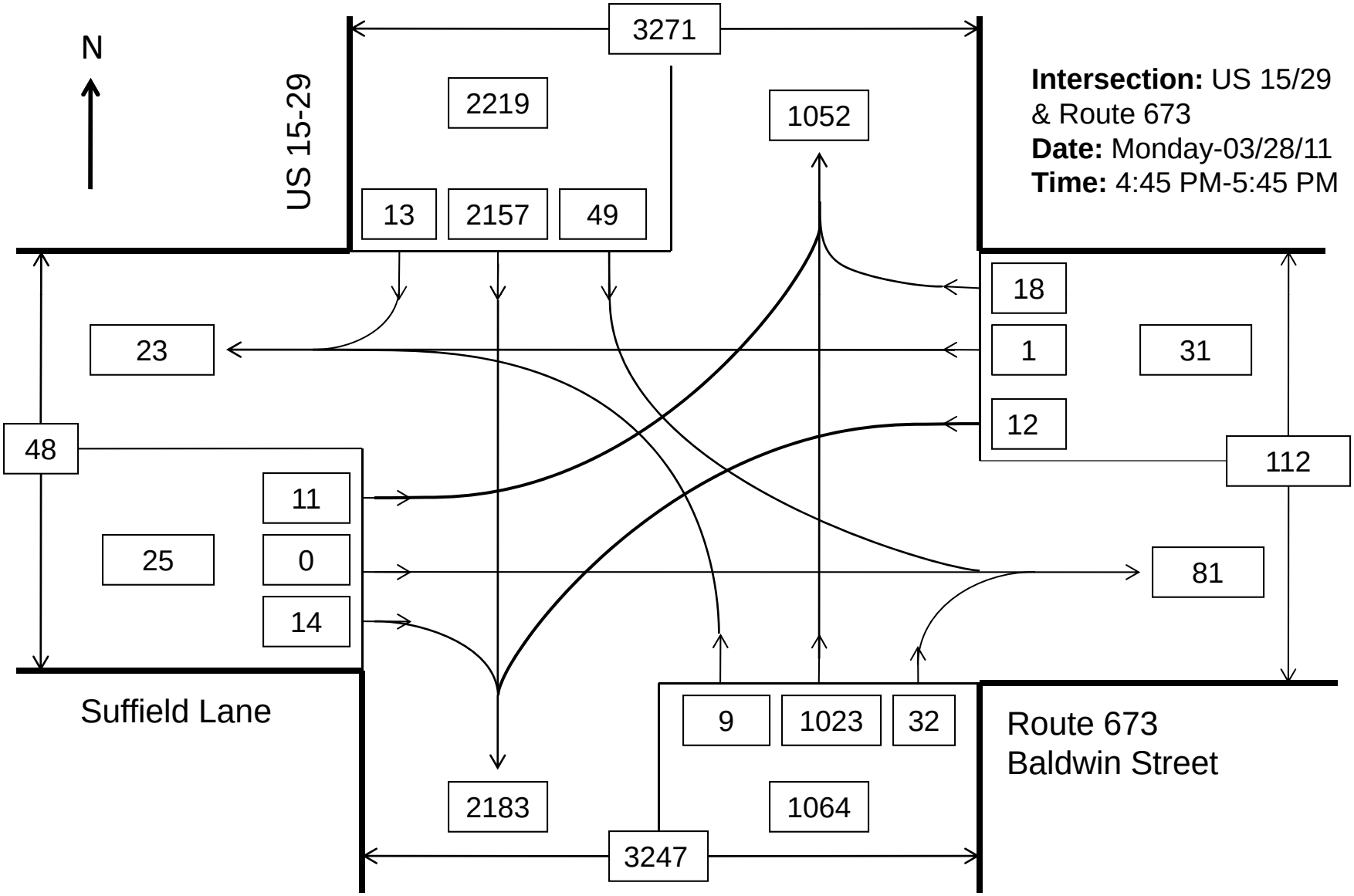

Intersection: US 15/29 & Route 673
Date: Monday-03/28/11
Time: 4:45 PM-5:45 PM

AM Peak Hour

Intersection: US 15/29
& Rte 674-Grays Mill Rd
Date: Tuesday-3/29/11
Time: 7:15 AM-8:15 AM

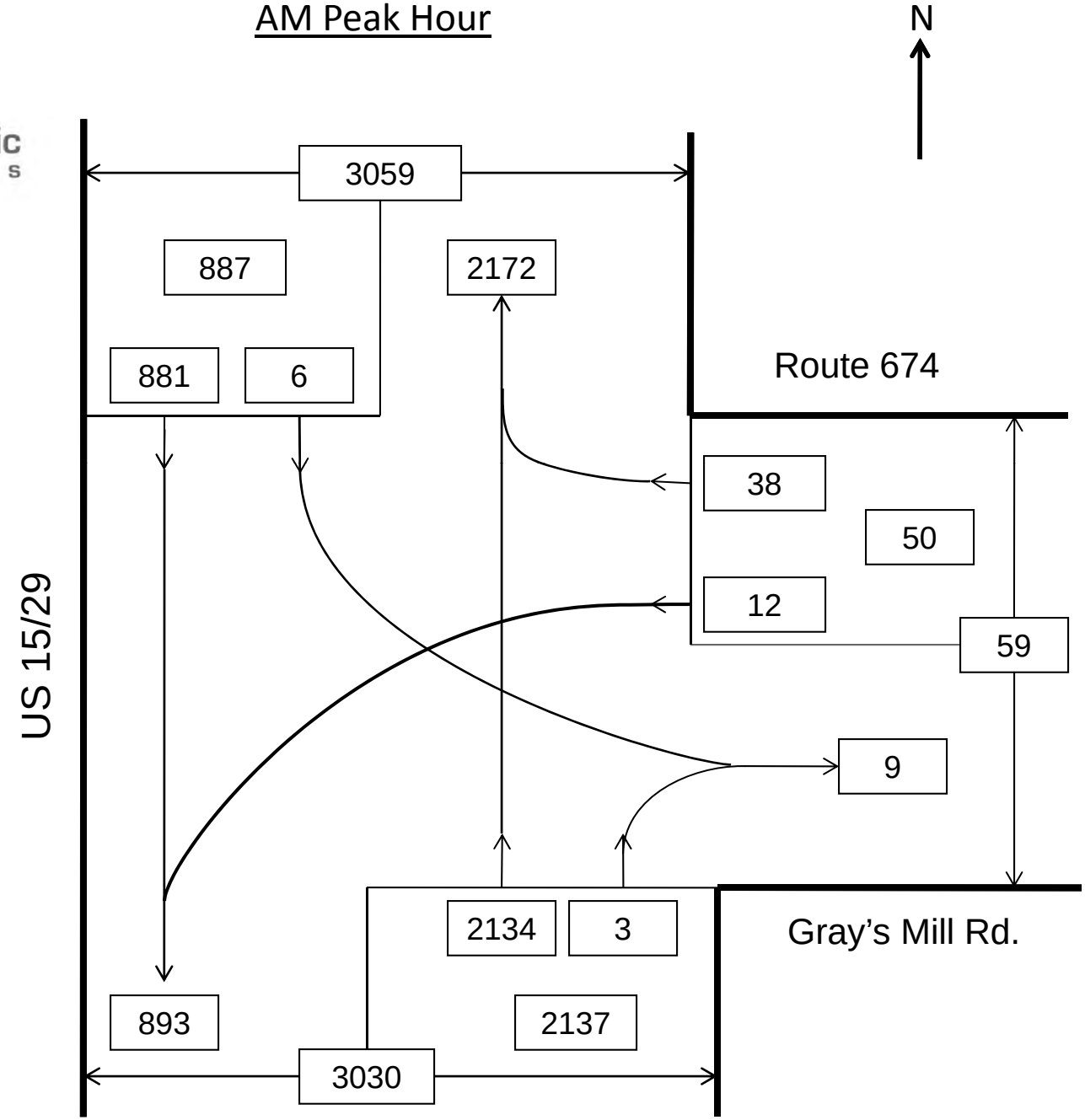

PM Peak Hour

Intersection: US 15/29
& Rte 674-Grays Mill Rd
Date: Monday-3/28/11
Time: 4:30 PM-5:30 PM

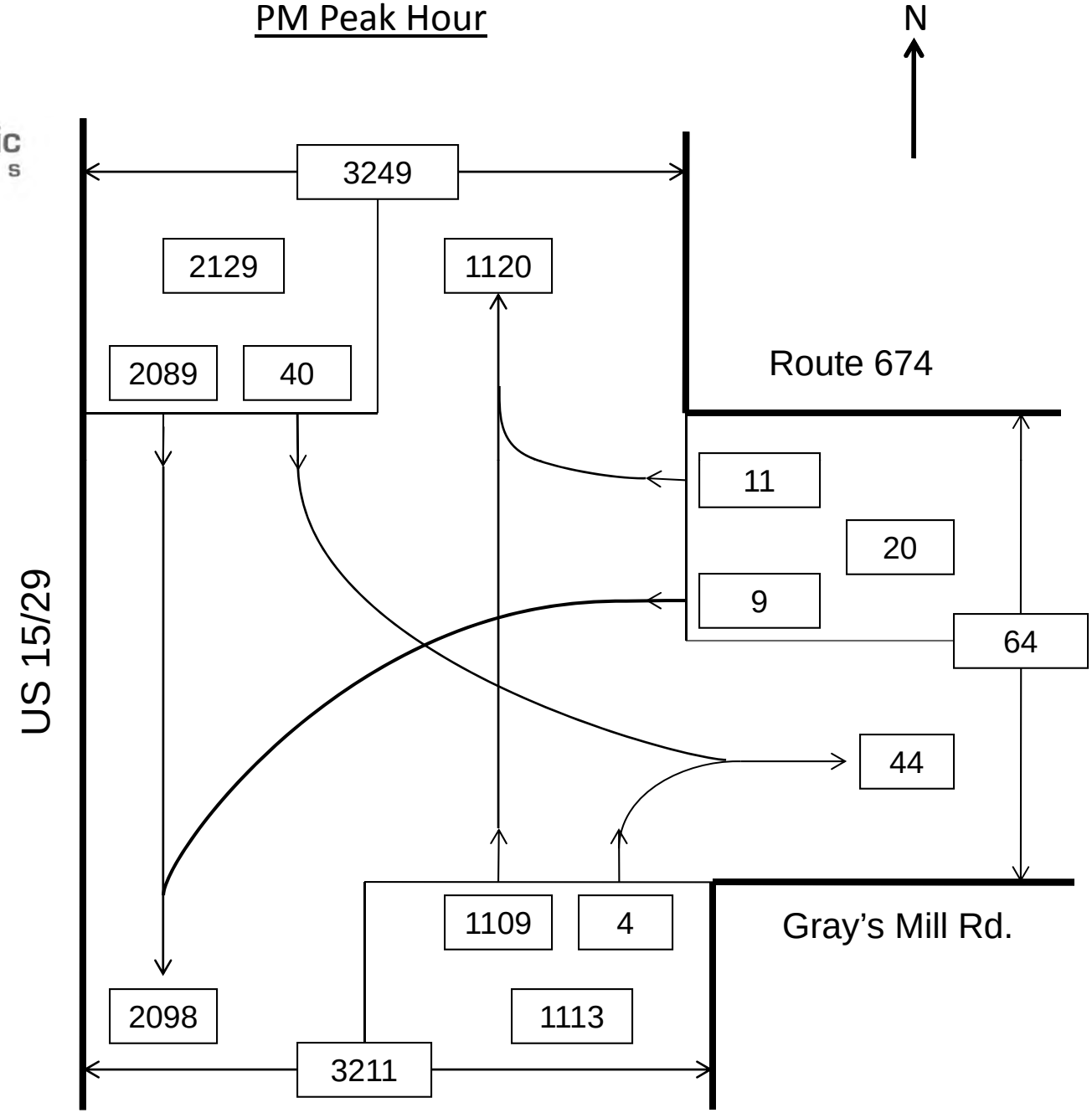

AM Peak Hour

Intersection: US 15/29 & Rte 676 (Riley Rd.)
Date: Tuesday-3/28/11
Time: 7:00 AM-8:00 AM

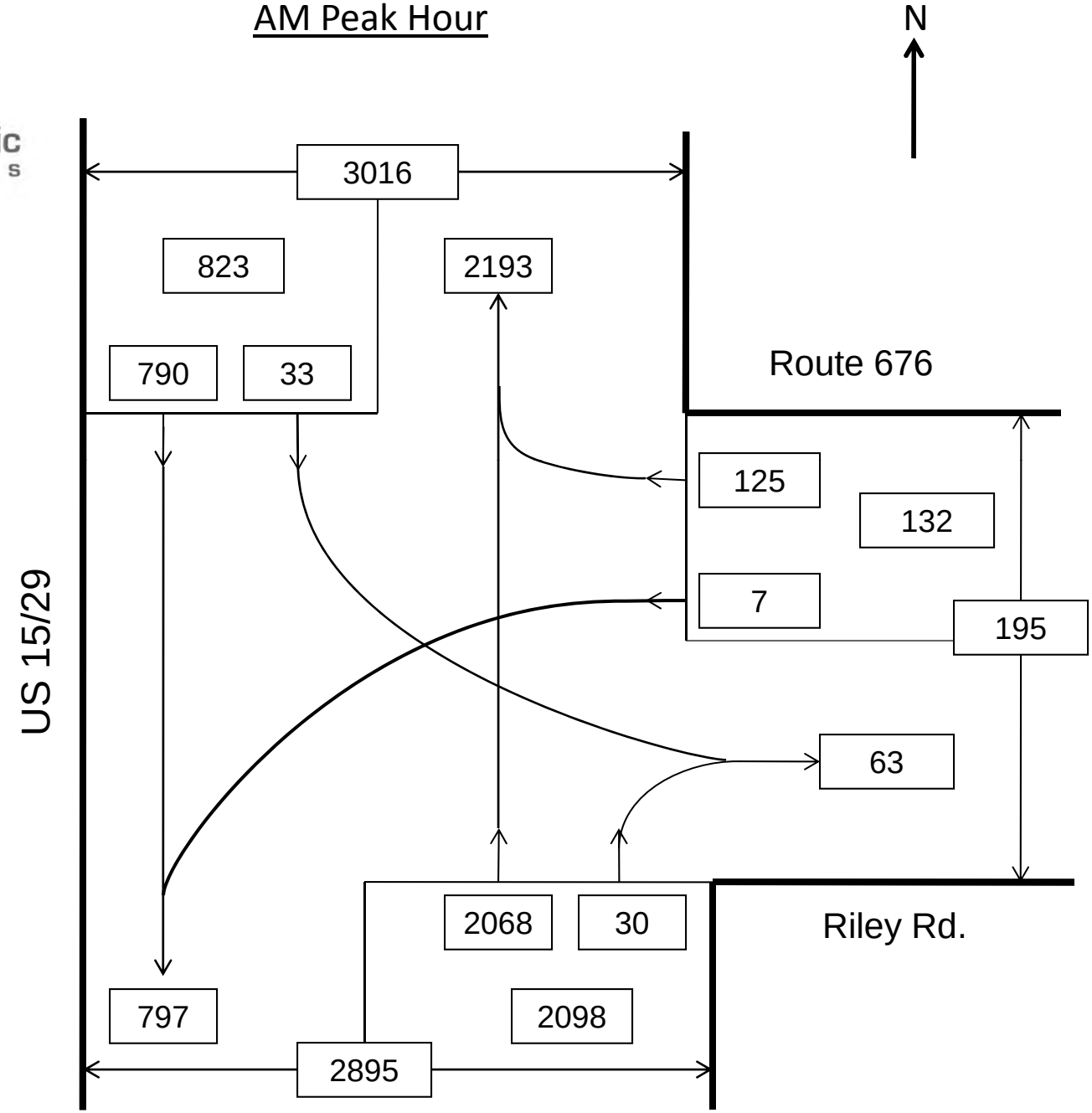

PM Peak Hour

Intersection: US 15/29 & Rte 676 (Riley Rd.)
Date: Monday-03/28/11
Time: 4:30 PM-5:30 PM

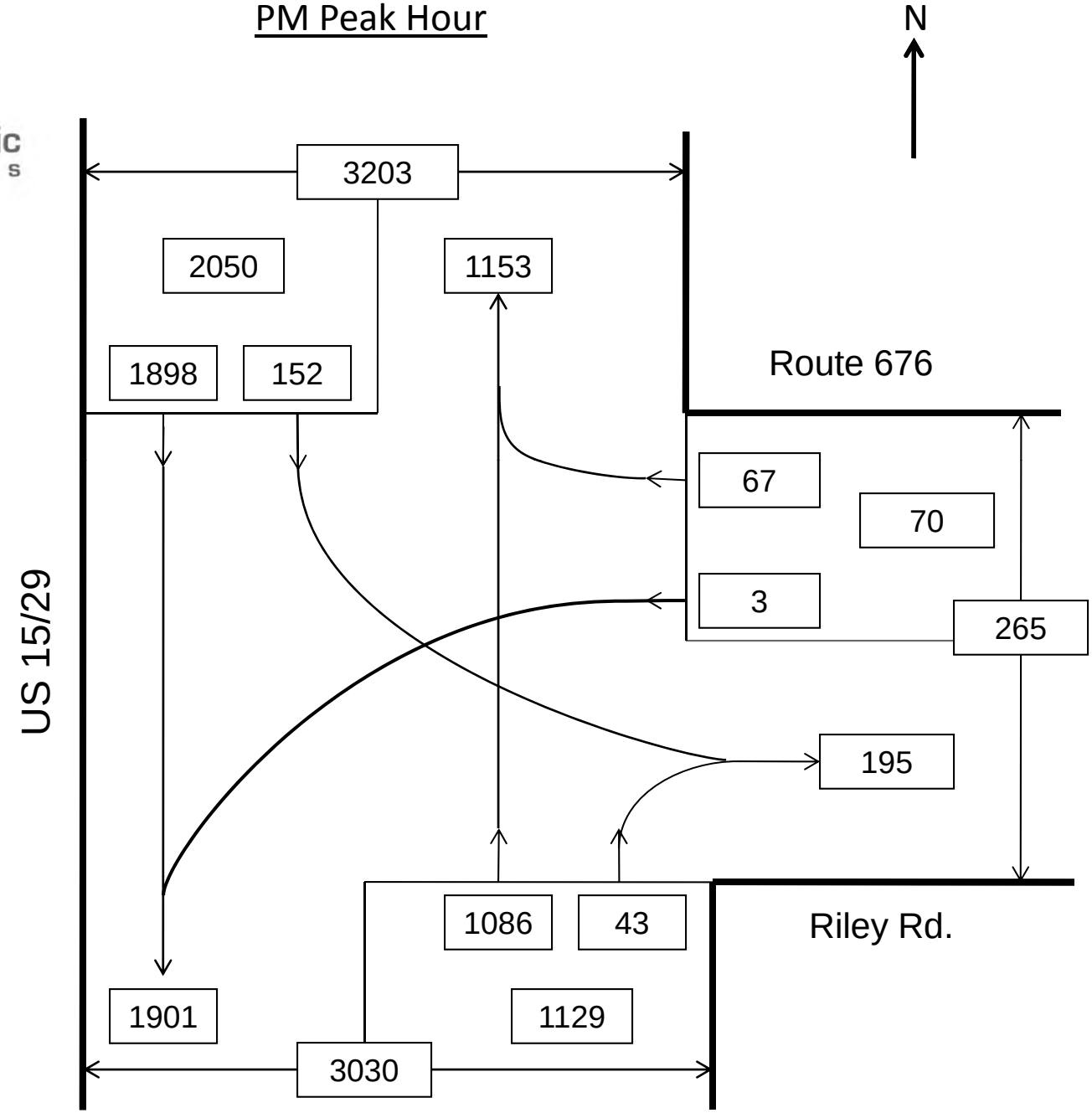

Technical Traffic services

AM Peak Hour

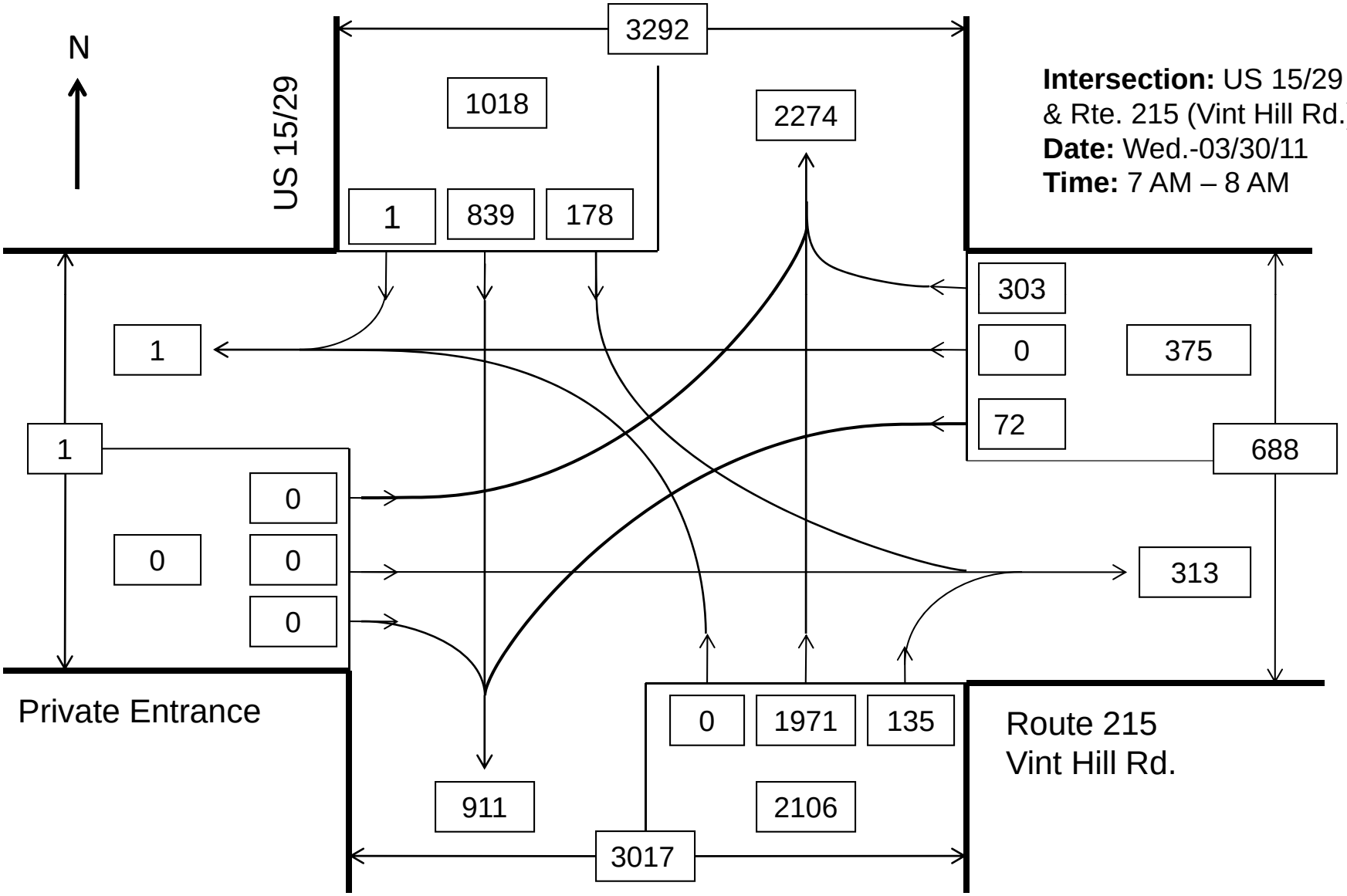

Intersection: US 15/29 & Rte. 215 (Vint Hill Rd.)
Date: Wed.-03/30/11
Time: 7 AM – 8 AM

Technical Traffic services

PM Peak Hour

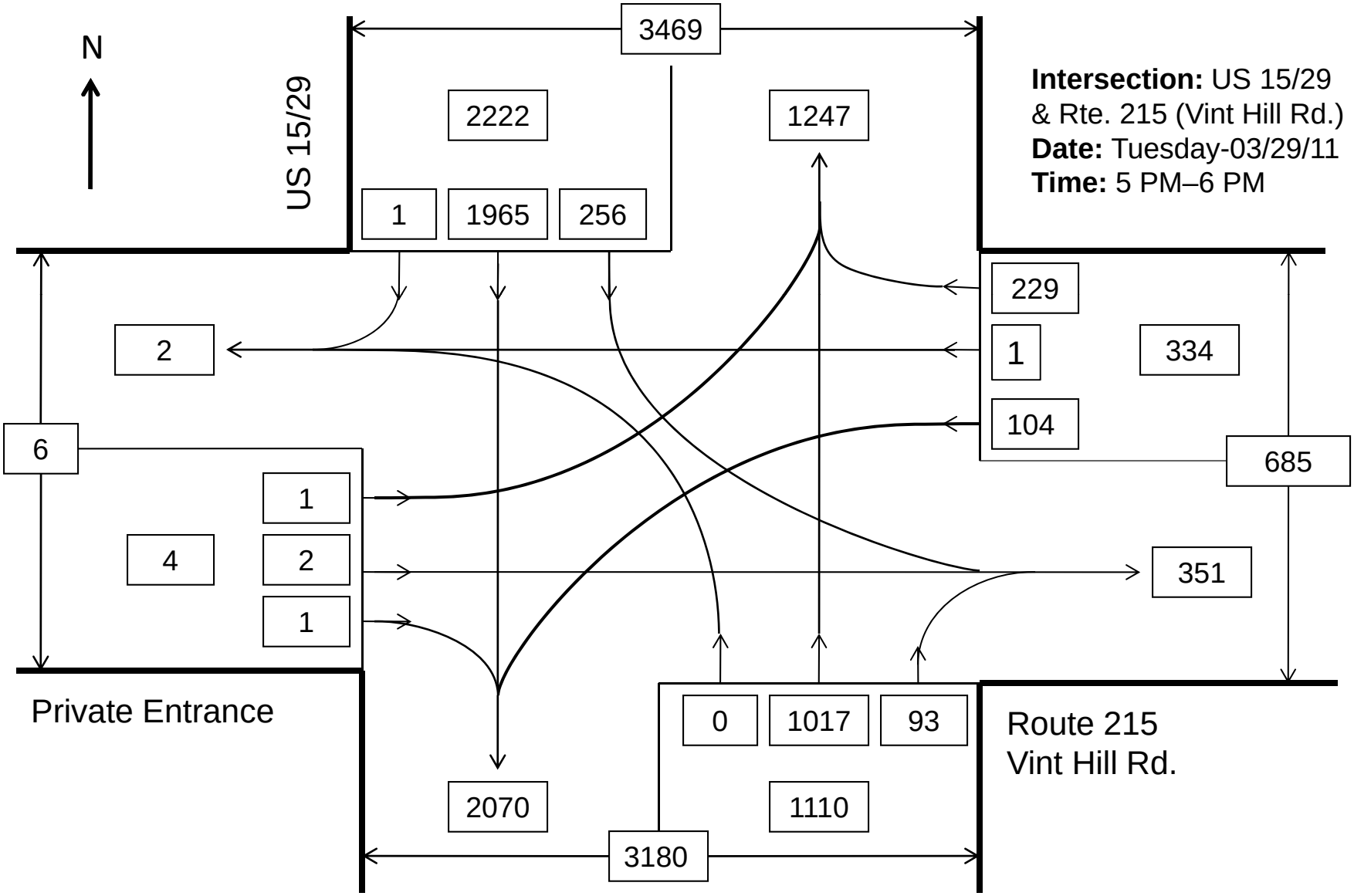

Intersection: US 15/29 & Rte. 215 (Vint Hill Rd.)
Date: Tuesday-03/29/11
Time: 5 PM–6 PM

PM Peak Turning Movement Study

Vehicle Volumes

Location: US Route 15/29 & SR 605 (Dumfries Rd./Colonial Rd.) **County/Area:** Fauquier-Warrenton

Date Surveyed: Monday-March 21, 2011 **Weather:** Cool/Cloudy/Dry

	US 15/29			US 15/29			SR 605-Dumfries Rd.			SR 605-Colonial Rd.			
	From North			From South			From East			From West			
End Time	Left	Thru	Right	Left	Thru	Right	Left	Thru	Right	Left	Thru	Right	Int. Total
16:15	6	469	8	9	241	91	122	7	5	7	6	15	986
16:30	13	444	7	11	235	88	111	5	7	6	5	19	951
16:45	14	434	6	12	241	96	123	7	8	3	3	11	958
17:00	20	513	10	9	276	86	129	11	6	6	8	31	1105
17:15	18	440	7	16	288	122	132	12	9	12	10	10	1076
17:30	18	420	6	17	261	132	140	7	5	6	9	32	1053
17:45	11	499	8	14	249	113	124	5	7	3	7	29	1069
18:00	21	519	10	19	233	114	116	8	7	10	11	14	1082
18:15	13	391	10	13	216	91	112	8	6	7	11	22	900
18:30	21	435	6	22	207	103	116	8	5	3	6	13	945
18:45	14	346	3	16	197	105	115	10	8	9	9	16	848
19:00	12	358	8	13	182	96	120	7	5	4	4	10	819
Total	181	5268	89	171	2826	1237	1460	95	78	76	89	222	11792

Pedestrian Volumes

Location: US Route 15/29 & SR 605 (Dumfries Rd./Colonial Rd.) **County/Area:** Fauquier-Warrenton

Date Surveyed: Monday-March 21, 2011 **Weather:** Cool/Cloudy/Dry

	US 15/29			US 15/29			SR 605-Dumfries Rd.			SR 605-Colonial Rd.			
	Across North Leg			Across South Leg			Across East Leg			Across West Leg			
End Time	Pedestrians			Pedestrians			Pedestrians			Pedestrians			Int. Total
16:15		0			0			0			0		0
16:30		0			0			0			0		0
16:45		0			0			0			0		0
17:00		0			0			0			0		0
17:15		0			0			0			0		0
17:30		0			0			0			0		0
17:45		0			0			0			0		0
18:00		0			0			0			0		0
18:15		0			0			0			0		0
18:30		0			0			0			0		0
18:45		0			0			0			0		0
19:00		0			0			0			0		0
Total		0			0			0			0		0

PM Peak Turning Movement Study

Vehicle Volumes

Location: US 15/29-SR 600 (Beverleys Mill Rd./Broad Run Church Rd.) **County/Area:** Fauquier-Warrenton

Date Surveyed: Monday-March 21, 2011 **Weather:** Cloudy/Dry

	US 15/29			US 15/29			SR 600-Broad Run Ch Rd.			SR 600-Beverley's Mill Rd.			
	From North			From South			From East			From West			
End Time	Left	Thru	Right	Left	Thru	Right	Left	Thru	Right	Left	Thru	Right	Int. Total
16:15	11	438	1	5	227	19	44	2	6	6	3	34	796
16:30	7	441	1	5	261	23	38	2	2	1	6	23	810
16:45	7	437	3	7	204	24	42	5	6	5	6	38	784
17:00	8	472	2	6	256	21	39	2	10	2	5	37	860
17:15	6	427	4	10	244	23	38	5	12	4	11	31	815
17:30	5	415	6	12	251	28	42	3	7	3	4	33	809
17:45	10	548	3	8	244	30	39	3	10	5	3	30	933
18:00	23	458	2	12	214	41	33	2	6	6	8	36	841
18:15	12	469	6	7	186	35	27	5	7	5	3	16	778
18:30	12	383	2	4	197	18	26	6	11	2	4	21	686
18:45	11	394	3	4	166	36	38	1	7	5	3	15	683
19:00	10	347	2	8	175	34	45	3	8	5	5	17	659
Total	122	5229	35	88	2625	332	451	39	92	49	61	331	9454

Pedestrian Volumes

Location: US 15/29-SR 600 (Beverleys Mill Rd./Broad Run Church Rd.) **County/Area:** Fauquier-Warrenton

Date Surveyed: Monday-March 21, 2011 **Weather:** Cloudy/Dry

	US 15/29			US 15/29			SR 600-Broad Run Ch Rd.			SR 600-Beverley's Mill Rd.			
	Across North Leg			Across South Leg			Across East Leg			Across West Leg			
End Time	Pedestrians			Pedestrians			Pedestrians			Pedestrians			Int. Total
16:15		0			0			0			0		0
16:30		0			0			0			0		0
16:45		0			0			0			0		0
17:00		0			0			0			0		0
17:15		0			0			0			0		0
17:30		0			0			0			0		0
17:45		0			0			0			0		0
18:00		0			0			0			0		0
18:15		0			0			0			0		0
18:30		0			0			0			0		0
18:45		0			0			0			0		0
19:00		0			0			0			0		0
Total		0			0			0			0		0

PM Peak Turning Movement Study

Vehicle Volumes

Location: US 15/29-SR 673 (Baldwin St.-Suffield Ln.) **County/Area:** Fauquier-New Baltimore

Date Surveyed: Monday-March 28, 2011 **Weather:** Cold/Sunny/Dry

	US 15/29			US 15/29			SR-673-Baldwin St.			Suffield Lane			
	From North			From South			From East			From West			
End Time	Left	Thru	Right	Left	Thru	Right	Left	Thru	Right	Left	Thru	Right	Int. Total
16:15	3	458	2	3	271	6	6	2	4	3	1	1	760
16:30	9	502	2	3	277	6	7	1	3	2	0	3	815
16:45	10	446	3	4	313	9	2	0	7	1	0	9	804
17:00	13	541	3	4	247	7	3	0	3	9	0	5	835
17:15	9	546	2	2	266	9	1	0	1	1	0	4	841
17:30	15	529	4	2	273	10	6	0	8	0	0	1	848
17:45	12	541	4	1	237	6	2	1	6	1	0	4	815
18:00	10	477	2	5	253	5	1	2	4	3	0	3	765
Total	81	4040	22	24	2137	58	28	6	36	20	1	30	6483

Pedestrian Volumes

Location: US 15/29-SR 673 (Baldwin St.-Suffield Ln.) **County/Area:** Fauquier-New Baltimore

Date Surveyed: Monday-March 28, 2011 **Weather:** Cold/Sunny/Dry

	US 15/29			US 15/29			SR 673-Baldwin St.			Suffield Lane			
	Across North Leg			Across South Leg			Across East Leg			Across West Leg			
End Time	Pedestrians			Pedestrians			Pedestrians			Pedestrians			Int. Total
16:15		0			0			0			0		0
16:30		0			0			0			0		0
16:45		0			0			0			0		0
17:00		0			0			0			0		0
17:15		0			0			0			0		0
17:30		0			0			0			0		0
17:45		0			0			0			0		0
18:00		0			0			0			0		0
Total		0			0			0			0		0

PM Peak Turning Movement Study

Vehicle Volumes

Location: US 15/29-SR 674 (Gray's Mill Rd.) **County/Area:** Fauquier-New Baltimore

Date Surveyed: Monday-March 28, 2011 **Weather:** Cold/Sunny/Dry

	US 15/29			US 15/29			SR-674-Gray's Mill Rd.			NA			
	From North			From South			From East			From West			
End Time	Left	Thru	Right	Left	Thru	Right	Left	Thru	Right	Left	Thru	Right	Int. Total
16:15	11	444			277	3	1		6				742
16:30	8	470			247	1	1		1				728
16:45	11	509			330	0	1		1				852
17:00	2	525			233	1	2		3				766
17:15	5	550			284	1	1		1				842
17:30	22	505			262	2	5		6				802
17:45	11	564			262	2	0		3				842
18:00	5	461			240	3	1		5				715
Total	75	4028			2135	13	12		26				6289

Pedestrian Volumes

Location: US 15/29-SR 622 (Gray's Mill Rd.) **County/Area:** Fauquier-New Baltimore

Date Surveyed: Monday-March 28, 2011 **Weather:** Cold/Sunny/Dry

	US 15/29			US 15/29			SR 674-Gray's Mill Rd.			NA			
	Across North Leg			Across South Leg			Across East Leg			Across West Leg			
End Time	Pedestrians			Pedestrians			Pedestrians			Pedestrians			Int. Total
16:15		0			0			0			0		0
16:30		0			0			0			0		0
16:45		0			0			0			0		0
17:00		0			0			0			0		0
17:15		0			0			0			0		0
17:30		0			0			0			0		0
17:45		0			0			0			0		0
18:00		0			0			0			0		0
Total		0			0			0			0		0

PM Peak Turning Movement Study

Vehicle Volumes

Location: US 15/29 & SR 676 (Riley Rd.) **County/Area:** Fauquier-New Baltimore

Date Surveyed: Monday-March 28, 2011 **Weather:** Cold/Sunny/Dry

	US 15/29			US 15/29			SR-676-Riley Rd.			NA			
	From North			From South			From East			From West			
End Time	Left	Thru	Right	Left	Thru	Right	Left	Thru	Right	Left	Thru	Right	Int. Total
16:15	37	379			261	14	1		17				709
16:30	35	469			230	8	1		11				754
16:45	33	484			313	11	0		20				861
17:00	37	476			253	5	2		18				791
17:15	34	478			255	13	0		13				793
17:30	48	460			265	14	1		16				804
17:45	45	493			234	8	1		11				792
18:00	31	455			228	11	1		15				741
Total	300	3694			2039	84	7		121				6245

Pedestrian Volumes

Location: US 15/29 & SR 676 (Riley Rd.) **County/Area:**Fauquier-New Baltimore

Date Surveyed: Monday-March 28, 2011 **Weather:** Cold/Sunny/Dry

	US 15/29			US 15/29			SR-676-Riley Rd.			NA			
	Across North Leg			Across South Leg			Across East Leg			Across West Leg			
End Time	Pedestrians			Pedestrians			Pedestrians			Pedestrians			Int. Total
16:15		0			0			0			0		0
16:30		0			0			0			0		0
16:45		0			0			0			0		0
17:00		0			0			0			0		0
17:15		0			0			0			0		0
17:30		0			0			0			0		0
17:45		0			0			0			0		0
18:00		0			0			0			0		0
Total		0			0			0			0		0

PM Peak Turning Movement Study

Vehicle Volumes

Location: US 15/29 & SR 215 (Vint Hill Rd.) **County/Area:** Fauquier-New Baltimore

Date Surveyed: Tuesday-March 29, 2011 **Weather:** Cold/Sunny/Dry

	US 15/29			US 15/29			SR-215-Vint Hill Rd.			Private Entrance			
	From North			From South			From East			From West			
End Time	Left	Thru	Right	Left	Thru	Right	Left	Thru	Right	Left	Thru	Right	Int. Total
16:15	51	528	0		264	20	24	0	59	0	0	0	946
16:30	62	460	1		275	17	19	1	55	1	1	0	892
16:45	49	419	0		251	20	35	0	60	2	2	2	840
17:00	71	480	0		261	23	21	0	51	0	1	0	908
17:15	76	530	0		262	26	18	0	67	0	1	1	981
17:30	62	465	0		261	24	25	1	58	0	1	0	897
17:45	59	494	1		211	21	29	0	51	0	0	0	866
18:00	59	476	0		283	22	32	0	53	1	0	0	926
Total	489	3852	2		2068	173	203	2	454	4	6	3	7256

Pedestrian Volumes

Location: US 15/29 & SR 215 (Vint Hill Rd.) **County/Area:** Fauquier-New Baltimore

Date Surveyed: Tuesday-March 29, 2011 **Weather:** Cold/Sunny/Dry

	US 15/29			US 15/29			SR-215-Vint Hill Rd.			Private Entrance			
	Across North Leg			Across South Leg			Across East Leg			Across West Leg			
End Time	Pedestrians			Pedestrians			Pedestrians			Pedestrians			Int. Total
16:15		0			0			0			0		0
16:30		0			0			0			0		0
16:45		0			0			0			0		0
17:00		0			0			0			0		0
17:15		0			0			0			0		0
17:30		0			0			0			0		0
17:45		0			0			0			0		0
18:00		0			0			0			0		0
Total		0			0			0			0		0

Data Collection Group

757.478.6761
LSmith@DataCollectionGroup.net

File Name : 1 Kennedy & Vint Hill Rd AM
Site Code : 00000001
Start Date : 3/23/2011
Page No : 1

Groups Printed- Unshifted

	From North					From East					From South					From West					
Start Time	Right	Thru	Left	Peds	App. Total	Right	Thru	Left	Peds	App. Total	Right	Thru	Left	Peds	App. Total	Right	Thru	Left	Peds	App. Total	Int. Total
06:00 AM	0	0	0	0	0	0	28	2	0	30	0	0	16	0	16	7	44	0	0	51	97
06:15 AM	0	0	0	0	0	0	37	7	0	44	1	0	23	0	24	11	79	0	0	90	158
06:30 AM	0	0	0	0	0	0	42	0	0	42	3	0	21	0	24	22	90	0	0	112	178
06:45 AM	0	0	0	0	0	0	45	9	0	54	3	0	20	0	23	22	85	0	0	107	184
Total	0	0	0	0	0	0	152	18	0	170	7	0	80	0	87	62	298	0	0	360	617
07:00 AM	0	0	0	0	0	0	40	4	0	44	2	0	20	0	22	25	83	0	0	108	174
07:15 AM	0	0	0	0	0	0	32	1	0	33	1	0	35	0	36	16	92	0	0	108	177
07:30 AM	0	0	0	0	0	0	75	3	0	78	4	0	37	0	41	16	87	0	0	103	222
07:45 AM	0	0	0	0	0	0	38	6	0	44	2	0	17	0	19	15	76	0	0	91	154
Total	0	0	0	0	0	0	185	14	0	199	9	0	109	0	118	72	338	0	0	410	727
08:00 AM	0	0	0	0	0	0	49	9	0	58	3	0	24	0	27	12	72	0	0	84	169
08:15 AM	0	0	0	0	0	0	58	10	0	68	3	0	20	0	23	23	80	0	0	103	194
08:30 AM	0	0	0	0	0	0	45	3	0	48	4	0	28	0	32	18	65	0	0	83	163
08:45 AM	0	0	0	0	0	0	46	9	0	55	1	0	15	0	16	19	57	0	0	76	147
Total	0	0	0	0	0	0	198	31	0	229	11	0	87	0	98	72	274	0	0	346	673
Grand Total	0	0	0	0	0	0	535	63	0	598	27	0	276	0	303	206	910	0	0	1116	2017
Apprch %	0	0	0	0		0	89.5	10.5	0		8.9	0	91.1	0		18.5	81.5	0	0		
Total %	0	0	0	0	0	0	26.5	3.1	0	29.6	1.3	0	13.7	0	15	10.2	45.1	0	0	55.3	

Data Collection Group

757.478.6761
LSmith@DataCollectionGroup.net

File Name : 1 Kennedy & Vint Hill Rd AM
Site Code : 00000001
Start Date : 3/23/2011
Page No : 2

	From North					From East					From South					From West					
Start Time	Right	Thru	Left	Peds	App. Total	Right	Thru	Left	Peds	App. Total	Right	Thru	Left	Peds	App. Total	Right	Thru	Left	Peds	App. Total	Int. Total
Peak Hour Analysis From 06:00 AM to 08:45 AM - Peak 1 of 1																					
Peak Hour for Entire Intersection Begins at 06:45 AM																					
06:45 AM	0	0	0	0	0	0	45	**9**	0	54	3	0	20	0	23	22	85	0	0	107	184
07:00 AM	0	0	0	0	0	0	40	4	0	44	2	0	20	0	22	**25**	83	0	0	**108**	174
07:15 AM	0	0	0	0	0	0	32	1	0	33	1	0	35	0	36	16	**92**	0	0	108	177
07:30 AM	0	0	0	0	0	0	**75**	3	0	**78**	**4**	0	**37**	0	**41**	16	87	0	0	103	**222**
Total Volume	0	0	0	0	0	0	192	17	0	209	10	0	112	0	122	79	347	0	0	426	757
% App. Total	0	0	0	0		0	91.9	8.1	0		8.2	0	91.8	0		18.5	81.5	0	0		
PHF	.000	.000	.000	.000	.000	.000	.640	.472	.000	.670	.625	.000	.757	.000	.744	.790	.943	.000	.000	.986	.852

Data Collection Group

757.478.6761
LSmith@DataCollectionGroup.net

File Name : 1 Kennedy & Vint Hill Rd AM
Site Code : 00000001
Start Date : 3/23/2011
Page No : 3

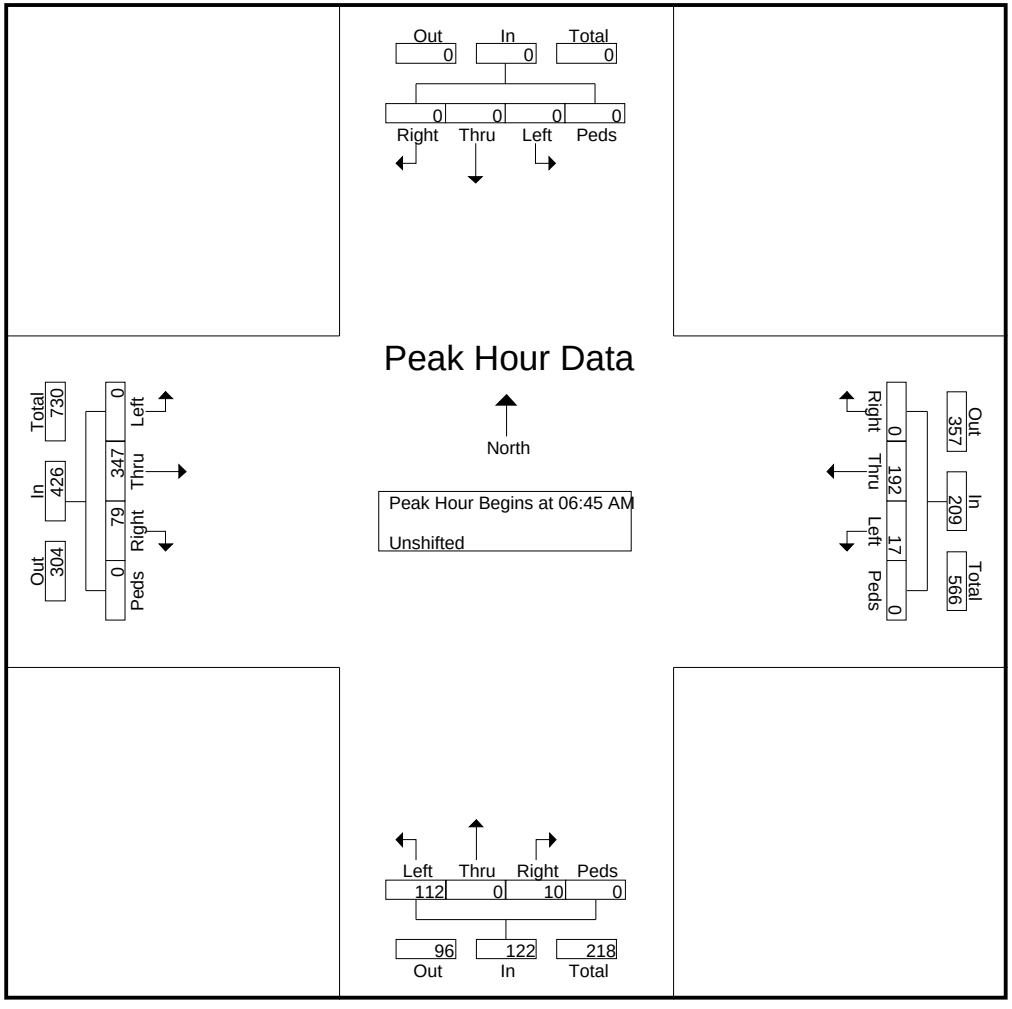

Data Collection Group

757.478.6761
LSmith@DataCollectionGroup.net

File Name : 1 Kennedy & Vint Hill Rd PM
Site Code : 00000001
Start Date : 3/22/2011
Page No : 1

Groups Printed- Unshifted

	From North					From East					From South					From West					
Start Time	Right	Thru	Left	Peds	App. Total	Right	Thru	Left	Peds	App. Total	Right	Thru	Left	Peds	App. Total	Right	Thru	Left	Peds	App. Total	Int. Total
04:00 PM	0	0	0	0	0	0	84	5	0	89	7	0	12	0	19	15	44	0	0	59	167
04:15 PM	0	0	0	0	0	0	91	6	0	97	7	0	17	0	24	32	43	0	0	75	196
04:30 PM	0	0	0	0	0	0	84	5	0	89	2	0	23	0	25	38	73	0	0	111	225
04:45 PM	0	0	0	0	0	0	80	4	0	84	5	0	36	0	41	32	64	0	0	96	221
Total	0	0	0	0	0	0	339	20	0	359	21	0	88	0	109	117	224	0	0	341	809
05:00 PM	0	0	0	0	0	0	98	4	0	102	7	0	29	0	36	37	60	0	0	97	235
05:15 PM	0	0	0	0	0	0	102	6	0	108	4	0	20	0	24	32	66	0	0	98	230
05:30 PM	0	0	0	0	0	0	91	3	0	94	8	0	18	0	26	29	69	0	0	98	218
05:45 PM	0	0	0	0	0	0	70	4	0	74	5	0	26	0	31	27	68	0	0	95	200
Total	0	0	0	0	0	0	361	17	0	378	24	0	93	0	117	125	263	0	0	388	883
06:00 PM	0	0	0	0	0	0	65	3	0	68	2	0	21	0	23	25	65	0	0	90	181
06:15 PM	0	0	0	0	0	0	59	3	0	62	5	0	28	0	33	19	50	0	0	69	164
06:30 PM	0	0	0	0	0	0	67	1	0	68	3	0	13	0	16	22	42	0	0	64	148
06:45 PM	0	0	0	0	0	0	48	2	0	50	4	0	7	0	11	20	33	0	0	53	114
Total	0	0	0	0	0	0	239	9	0	248	14	0	69	0	83	86	190	0	0	276	607
Grand Total	0	0	0	0	0	0	939	46	0	985	59	0	250	0	309	328	677	0	0	1005	2299
Apprch %	0	0	0	0		0	95.3	4.7	0		19.1	0	80.9	0		32.6	67.4	0	0		
Total %	0	0	0	0	0	0	40.8	2	0	42.8	2.6	0	10.9	0	13.4	14.3	29.4	0	0	43.7	

Data Collection Group

757.478.6761
LSmith@DataCollectionGroup.net

File Name : 1 Kennedy & Vint Hill Rd PM
Site Code : 00000001
Start Date : 3/22/2011
Page No : 2

	From North					From East					From South					From West					
Start Time	Right	Thru	Left	Peds	App. Total	Right	Thru	Left	Peds	App. Total	Right	Thru	Left	Peds	App. Total	Right	Thru	Left	Peds	App. Total	Int. Total
Peak Hour Analysis From 04:00 PM to 06:45 PM - Peak 1 of 1																					
Peak Hour for Entire Intersection Begins at 04:30 PM																					
04:30 PM	0	0	0	0	0	0	84	5	0	89	2	0	23	0	25	**38**	**73**	0	0	**111**	225
04:45 PM	0	0	0	0	0	0	80	4	0	84	5	0	**36**	0	**41**	32	64	0	0	96	221
05:00 PM	0	0	0	0	0	0	98	4	0	102	**7**	0	29	0	36	37	60	0	0	97	**235**
05:15 PM	0	0	0	0	0	0	**102**	**6**	0	**108**	4	0	20	0	24	32	66	0	0	98	230
Total Volume	0	0	0	0	0	0	364	19	0	383	18	0	108	0	126	139	263	0	0	402	911
% App. Total	0	0	0	0		0	95	5	0		14.3	0	85.7	0		34.6	65.4	0	0		
PHF	.000	.000	.000	.000	.000	.000	.892	.792	.000	.887	.643	.000	.750	.000	.768	.914	.901	.000	.000	.905	.969

Data Collection Group

757.478.6761
LSmith@DataCollectionGroup.net

File Name : 1 Kennedy & Vint Hill Rd PM
Site Code : 00000001
Start Date : 3/22/2011
Page No : 3

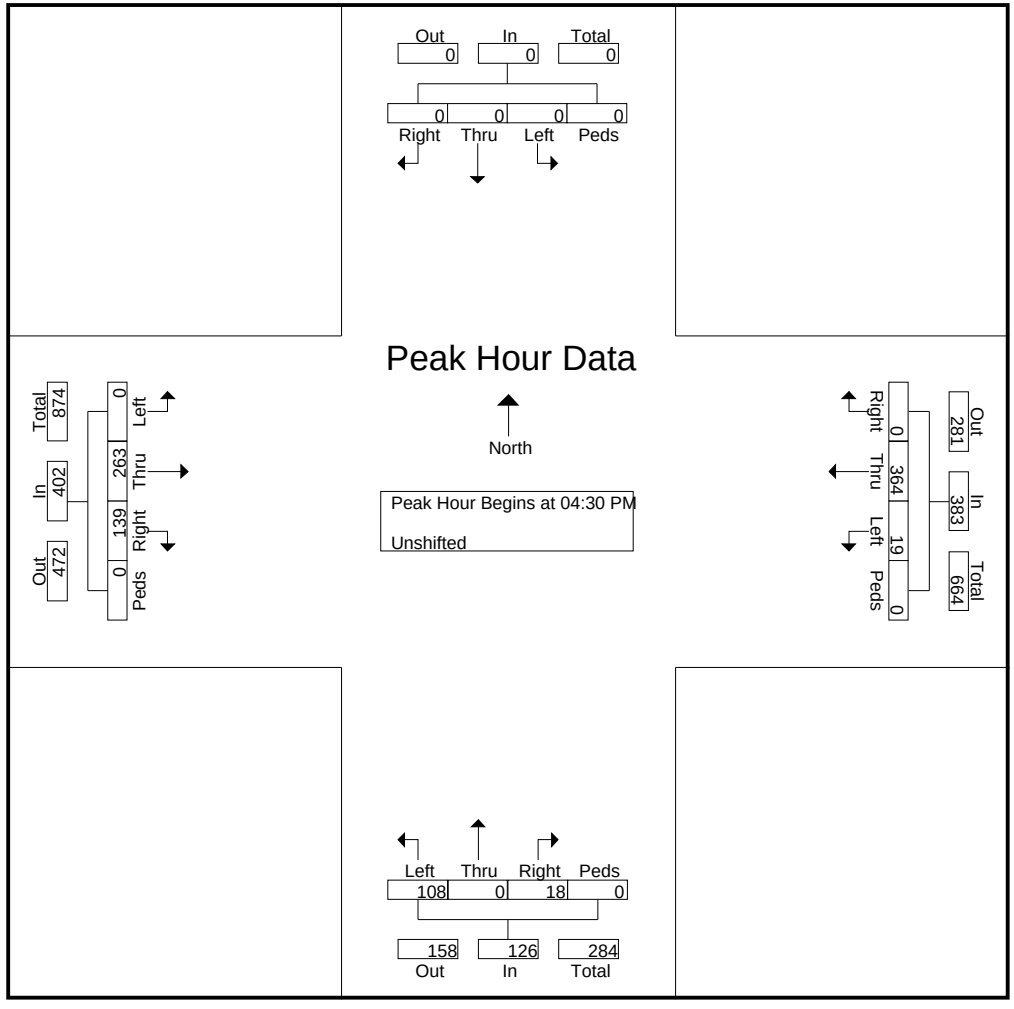

Data Collection Group

757.478.6761
LSmith@DataCollectionGroup.net

File Name : 2 AM
Site Code : 00000022
Start Date : 3/23/2011
Page No : 1

Groups Printed- Unshifted - Bank 1

	Riley From North					Broad Run Church From East					Riley From South					Broad Run Church From West					
Start Time	Right	Thru	Left	Peds	App. Total	Right	Thru	Left	Peds	App. Total	Right	Thru	Left	Peds	App. Total	Right	Thru	Left	Peds	App. Total	Int. Total
06:00 AM	2	2	0	0	4	0	6	0	0	6	3	22	4	0	29	1	18	0	0	19	58
06:15 AM	0	3	0	0	3	0	10	1	0	11	16	27	6	0	49	1	24	0	0	25	88
06:30 AM	0	3	2	0	5	1	10	3	0	14	9	28	7	0	44	3	42	0	0	45	108
06:45 AM	0	6	1	0	7	1	7	7	0	15	15	23	4	0	42	3	40	1	0	44	108
Total	2	14	3	0	19	2	33	11	0	46	43	100	21	0	164	8	124	1	0	133	362
07:00 AM	2	10	4	0	16	2	8	17	0	27	21	32	5	0	58	16	73	1	0	90	191
07:15 AM	1	9	4	0	14	3	19	2	0	24	40	24	18	0	82	12	54	3	0	69	189
07:30 AM	0	3	3	0	6	2	24	5	0	31	18	26	10	0	54	2	55	0	0	57	148
07:45 AM	2	11	5	0	18	3	10	2	0	15	20	15	6	0	41	5	37	2	0	44	118
Total	5	33	16	0	54	10	61	26	0	97	99	97	39	0	235	35	219	6	0	260	646
08:00 AM	0	1	2	0	3	5	22	5	0	32	24	28	6	0	58	2	71	2	0	75	168
08:15 AM	2	6	6	0	14	13	44	13	0	70	27	21	4	0	52	3	72	2	0	77	213
08:30 AM	1	8	4	0	13	2	36	12	0	50	10	32	7	0	49	3	38	1	0	42	154
08:45 AM	3	7	3	0	13	2	10	4	0	16	4	19	11	0	34	2	20	2	0	24	87
Total	6	22	15	0	43	22	112	34	0	168	65	100	28	0	193	10	201	7	0	218	622
Grand Total	13	69	34	0	116	34	206	71	0	311	207	297	88	0	592	53	544	14	0	611	1630
Apprch %	11.2	59.5	29.3	0		10.9	66.2	22.8	0		35	50.2	14.9	0		8.7	89	2.3	0		
Total %	0.8	4.2	2.1	0	7.1	2.1	12.6	4.4	0	19.1	12.7	18.2	5.4	0	36.3	3.3	33.4	0.9	0	37.5	
Unshifted	13	63	34	0	110	34	190	65	0	289	194	294	86	0	574	46	532	14	0	592	1565
% Unshifted	100	91.3	100	0	94.8	100	92.2	91.5	0	92.9	93.7	99	97.7	0	97	86.8	97.8	100	0	96.9	96
Bank 1	0	6	0	0	6	0	16	6	0	22	13	3	2	0	18	7	12	0	0	19	65
% Bank 1	0	8.7	0	0	5.2	0	7.8	8.5	0	7.1	6.3	1	2.3	0	3	13.2	2.2	0	0	3.1	4

Data Collection Group

757.478.6761
LSmith@DataCollectionGroup.net

File Name : 2 AM
Site Code : 00000022
Start Date : 3/23/2011
Page No : 2

	Riley From North					Broad Run Church From East					Riley From South					Broad Run Church From West					
Start Time	Right	Thru	Left	Peds	App. Total	Right	Thru	Left	Peds	App. Total	Right	Thru	Left	Peds	App. Total	Right	Thru	Left	Peds	App. Total	Int. Total
Peak Hour Analysis From 06:00 AM to 08:45 AM - Peak 1 of 1																					
Peak Hour for Entire Intersection Begins at 07:45 AM																					
07:45 AM	**2**	**11**	5	0	**18**	3	10	2	0	15	20	15	6	0	41	**5**	37	**2**	0	44	118
08:00 AM	0	1	2	0	3	5	22	5	0	32	24	28	6	0	**58**	2	71	2	0	75	168
08:15 AM	2	6	**6**	0	14	**13**	**44**	**13**	0	**70**	**27**	21	4	0	52	3	**72**	2	0	**77**	**213**
08:30 AM	1	8	4	0	13	2	36	12	0	50	10	**32**	**7**	0	49	3	38	1	0	42	154
Total Volume	5	26	17	0	48	23	112	32	0	167	81	96	23	0	200	13	218	7	0	238	653
% App. Total	10.4	54.2	35.4	0		13.8	67.1	19.2	0		40.5	48	11.5	0		5.5	91.6	2.9	0		
PHF	.625	.591	.708	.000	.667	.442	.636	.615	.000	.596	.750	.750	.821	.000	.862	.650	.757	.875	.000	.773	.766

Data Collection Group

757.478.6761
LSmith@DataCollectionGroup.net

File Name : 2 AM
Site Code : 00000022
Start Date : 3/23/2011
Page No : 3

Peak Hour Data

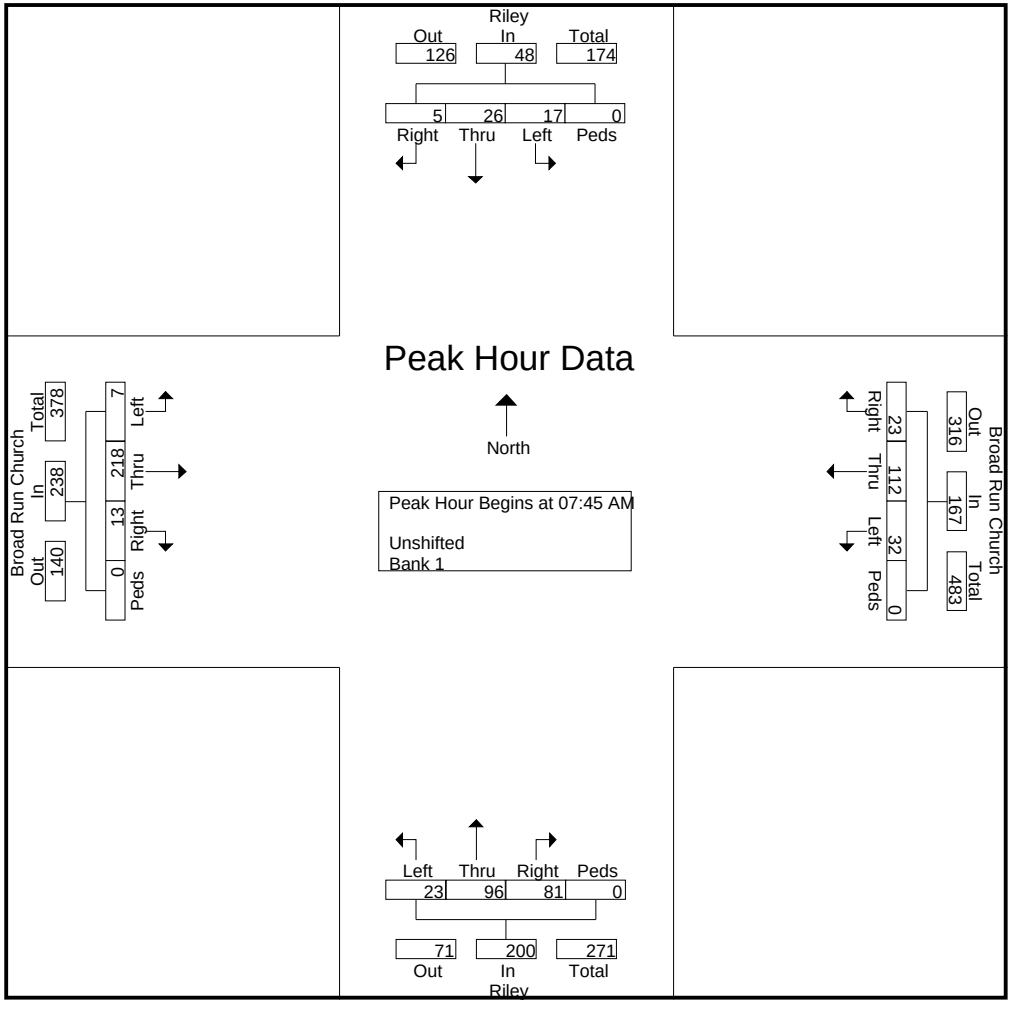

Data Collection Group

757.478.6761
LSmith@DataCollectionGroup.net

File Name : 2 PM
Site Code : 00000002
Start Date : 3/22/2011
Page No : 1

Groups Printed- Unshifted - Bank 1

	Riley From North					Broad Run Church From East					Riley From South					Broad Run Church From West					
Start Time	Right	Thru	Left	Peds	App. Total	Right	Thru	Left	Peds	App. Total	Right	Thru	Left	Peds	App. Total	Right	Thru	Left	Peds	App. Total	Int. Total
04:00 PM	9	41	5	0	55	2	26	6	0	34	7	17	4	0	28	8	17	1	0	26	143
04:15 PM	10	35	4	0	49	0	40	14	0	54	6	6	6	0	18	10	15	0	0	25	146
04:30 PM	9	36	4	0	49	3	45	15	0	63	8	10	10	0	28	6	17	1	0	24	164
04:45 PM	11	37	6	0	54	0	45	11	0	56	10	9	11	0	30	6	20	0	0	26	166
Total	39	149	19	0	207	5	156	46	0	207	31	42	31	0	104	30	69	2	0	101	619
05:00 PM	9	28	3	0	40	1	36	18	0	55	3	16	7	0	26	6	26	1	0	33	154
05:15 PM	7	29	3	0	39	1	55	11	0	67	8	10	9	0	27	9	19	3	0	31	164
05:30 PM	3	38	2	0	43	0	41	19	0	60	7	16	3	0	26	10	18	0	0	28	157
05:45 PM	6	40	5	0	51	4	29	10	0	43	6	11	4	0	21	8	18	1	0	27	142
Total	25	135	13	0	173	6	161	58	0	225	24	53	23	0	100	33	81	5	0	119	617
06:00 PM	8	25	3	0	36	2	36	8	0	46	1	23	6	0	30	5	21	6	0	32	144
06:15 PM	7	31	1	0	39	1	21	8	0	30	7	10	7	0	24	7	12	2	0	21	114
06:30 PM	10	39	2	0	51	2	30	8	0	40	7	12	3	0	22	9	8	3	0	20	133
06:45 PM	3	30	3	0	36	0	28	3	0	31	4	10	3	0	17	4	12	0	0	16	100
Total	28	125	9	0	162	5	115	27	0	147	19	55	19	0	93	25	53	11	0	89	491
Grand Total	92	409	41	0	542	16	432	131	0	579	74	150	73	0	297	88	203	18	0	309	1727
Apprch %	17	75.5	7.6	0		2.8	74.6	22.6	0		24.9	50.5	24.6	0		28.5	65.7	5.8	0		
Total %	5.3	23.7	2.4	0	31.4	0.9	25	7.6	0	33.5	4.3	8.7	4.2	0	17.2	5.1	11.8	1	0	17.9	
Unshifted	92	399	40	0	531	14	428	130	0	572	70	138	71	0	279	83	196	18	0	297	1679
% Unshifted	100	97.6	97.6	0	98	87.5	99.1	99.2	0	98.8	94.6	92	97.3	0	93.9	94.3	96.6	100	0	96.1	97.2
Bank 1	0	10	1	0	11	2	4	1	0	7	4	12	2	0	18	5	7	0	0	12	48
% Bank 1	0	2.4	2.4	0	2	12.5	0.9	0.8	0	1.2	5.4	8	2.7	0	6.1	5.7	3.4	0	0	3.9	2.8

Data Collection Group

757.478.6761
LSmith@DataCollectionGroup.net

File Name : 2 PM
Site Code : 00000002
Start Date : 3/22/2011
Page No : 2

	Riley From North					Broad Run Church From East					Riley From South					Broad Run Church From West					
Start Time	Right	Thru	Left	Peds	App. Total	Right	Thru	Left	Peds	App. Total	Right	Thru	Left	Peds	App. Total	Right	Thru	Left	Peds	App. Total	Int. Total
Peak Hour Analysis From 04:00 PM to 06:45 PM - Peak 1 of 1																					
Peak Hour for Entire Intersection Begins at 04:30 PM																					
04:30 PM	9	36	4	0	49	**3**	45	15	0	63	8	10	10	0	28	6	17	1	0	24	164
04:45 PM	**11**	**37**	**6**	0	**54**	0	45	11	0	56	**10**	9	**11**	0	**30**	6	20	0	0	26	**166**
05:00 PM	9	28	3	0	40	1	36	**18**	0	55	3	**16**	7	0	26	6	**26**	1	0	**33**	154
05:15 PM	7	29	3	0	39	1	**55**	11	0	**67**	8	10	9	0	27	**9**	19	**3**	0	31	164
Total Volume	36	130	16	0	182	5	181	55	0	241	29	45	37	0	111	27	82	5	0	114	648
% App. Total	19.8	71.4	8.8	0		2.1	75.1	22.8	0		26.1	40.5	33.3	0		23.7	71.9	4.4	0		
PHF	.818	.878	.667	.000	.843	.417	.823	.764	.000	.899	.725	.703	.841	.000	.925	.750	.788	.417	.000	.864	.976

Data Collection Group

757.478.6761
LSmith@DataCollectionGroup.net

File Name : 2 PM
Site Code : 00000002
Start Date : 3/22/2011
Page No : 3

Peak Hour Data

Peak Hour Begins at 04:30 PM

Unshifted
Bank 1

North

Riley

Out	In	Total
55	182	237

Right	Thru	Left	Peds
36	130	16	0

Broad Run Church

Out	In	Total
127	241	368

Right	Thru	Left	Peds
5	181	55	0

Broad Run Church

Out	In	Total
254	114	368

Peds	Right	Thru	Left
0	27	82	5

Riley

Left	Thru	Right	Peds
37	45	29	0

Out	In	Total
212	111	323

Data Collection Group

757.478.6761
LSmith@DataCollectionGroup.net

File Name : 3 AM
Site Code : 00000003
Start Date : 3/23/2011
Page No : 1

Groups Printed- Vehicles - Trucks

	Riley From North					Dumfries From East					Drive From South					Dumfries From West					
Start Time	Right	Thru	Left	Peds	App. Total	Right	Thru	Left	Peds	App. Total	Right	Thru	Left	Peds	App. Total	Right	Thru	Left	Peds	App. Total	Int. Total
06:00 AM	4	0	1	0	5	4	18	0	0	22	0	1	0	0	1	0	46	6	0	52	80
06:15 AM	3	0	6	0	9	4	12	0	0	16	0	0	0	0	0	0	39	9	0	48	73
06:30 AM	4	0	4	0	8	4	21	0	0	25	0	0	0	0	0	0	69	16	0	85	118
06:45 AM	8	0	9	0	17	6	29	0	0	35	0	0	1	0	1	0	102	20	0	122	175
Total	19	0	20	0	39	18	80	0	0	98	0	1	1	0	2	0	256	51	0	307	446
07:00 AM	23	0	14	0	37	32	37	0	0	69	0	0	0	0	0	0	168	50	0	218	324
07:15 AM	35	1	30	0	66	44	56	0	0	100	0	0	0	0	0	0	121	47	0	168	334
07:30 AM	23	0	7	0	30	7	80	0	0	87	0	0	0	0	0	0	72	8	0	80	197
07:45 AM	18	0	5	0	23	4	54	0	0	58	0	0	0	0	0	0	69	13	0	82	163
Total	99	1	56	0	156	87	227	0	0	314	0	0	0	0	0	0	430	118	0	548	1018
08:00 AM	21	0	11	0	32	4	32	0	0	36	0	0	0	0	0	0	80	12	0	92	160
08:15 AM	20	0	4	0	24	10	49	0	0	59	0	0	0	0	0	0	64	13	0	77	160
08:30 AM	21	0	2	0	23	5	67	0	0	72	0	0	1	0	1	1	49	5	0	55	151
08:45 AM	16	0	2	0	18	5	58	0	0	63	0	0	0	0	0	0	39	5	0	44	125
Total	78	0	19	0	97	24	206	0	0	230	0	0	1	0	1	1	232	35	0	268	596
Grand Total	196	1	95	0	292	129	513	0	0	642	0	1	2	0	3	1	918	204	0	1123	2060
Apprch %	67.1	0.3	32.5	0		20.1	79.9	0	0		0	33.3	66.7	0		0.1	81.7	18.2	0		
Total %	9.5	0	4.6	0	14.2	6.3	24.9	0	0	31.2	0	0	0.1	0	0.1	0	44.6	9.9	0	54.5	
Vehicles	178	1	84	0	263	110	490	0	0	600	0	1	2	0	3	1	889	188	0	1078	1944
% Vehicles	90.8	100	88.4	0	90.1	85.3	95.5	0	0	93.5	0	100	100	0	100	100	96.8	92.2	0	96	94.4
Trucks	18	0	11	0	29	19	23	0	0	42	0	0	0	0	0	0	29	16	0	45	116
% Trucks	9.2	0	11.6	0	9.9	14.7	4.5	0	0	6.5	0	0	0	0	0	0	3.2	7.8	0	4	5.6

Data Collection Group

757.478.6761
LSmith@DataCollectionGroup.net

File Name : 3 AM
Site Code : 00000003
Start Date : 3/23/2011
Page No : 2

	Riley From North					Dumfries From East					Drive From South					Dumfries From West					
Start Time	Right	Thru	Left	Peds	App. Total	Right	Thru	Left	Peds	App. Total	Right	Thru	Left	Peds	App. Total	Right	Thru	Left	Peds	App. Total	Int. Total
Peak Hour Analysis From 06:00 AM to 08:30 AM - Peak 1 of 1																					
Peak Hour for Entire Intersection Begins at 06:45 AM																					
06:45 AM	8	0	9	0	17	6	29	0	0	35	0	0	**1**	0	**1**	0	102	20	0	122	175
07:00 AM	23	0	14	0	37	32	37	0	0	69	0	0	0	0	0	0	**168**	**50**	0	**218**	324
07:15 AM	**35**	**1**	**30**	0	**66**	**44**	56	0	0	**100**	0	0	0	0	0	0	121	47	0	168	**334**
07:30 AM	23	0	7	0	30	7	**80**	0	0	87	0	0	0	0	0	0	72	8	0	80	197
Total Volume	89	1	60	0	150	89	202	0	0	291	0	0	1	0	1	0	463	125	0	588	1030
% App. Total	59.3	0.7	40	0		30.6	69.4	0	0		0	0	100	0		0	78.7	21.3	0		
PHF	.636	.250	.500	.000	.568	.506	.631	.000	.000	.728	.000	.000	.250	.000	.250	.000	.689	.625	.000	.674	.771

Data Collection Group

757.478.6761
LSmith@DataCollectionGroup.net

File Name : 3 AM
Site Code : 00000003
Start Date : 3/23/2011
Page No : 3

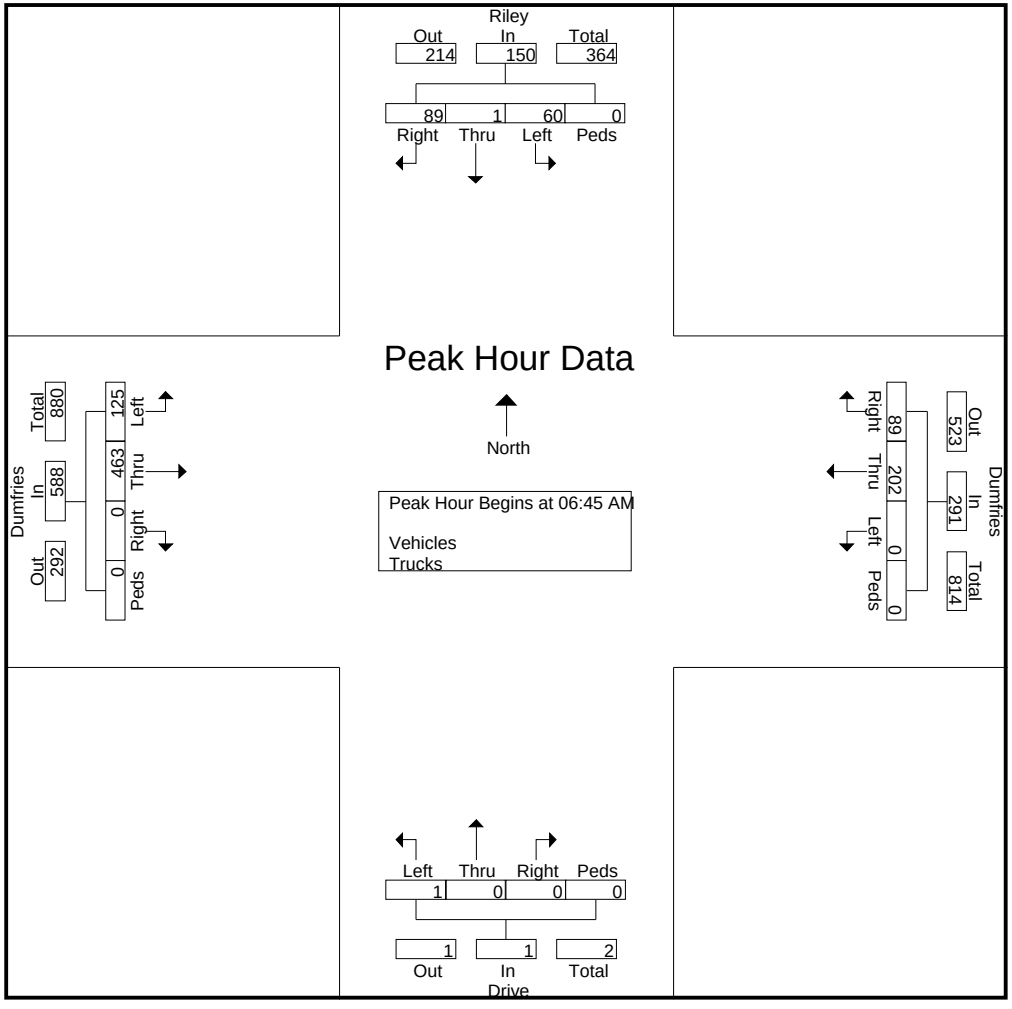

Data Collection Group

757.478.6761
LSmith@DataCollectionGroup.net

File Name : 5 Dumfries & Rogues PM
Site Code : 00000005
Start Date : 3/30/2011
Page No : 1

Groups Printed- Unshifted

	Rogues From North					Dumfries From East					From South					Dumfries From West					
Start Time	Right	Thru	Left	Peds	App. Total	Right	Thru	Left	Peds	App. Total	Right	Thru	Left	Peds	App. Total	Right	Thru	Left	Peds	App. Total	Int. Total
04:00 PM	64	0	12	0	76	3	41	0	0	44	0	0	0	0	0	0	25	32	0	57	177
04:15 PM	107	0	9	0	116	5	36	0	0	41	0	0	0	0	0	0	25	32	0	57	214
04:30 PM	82	0	18	0	100	2	31	0	0	33	0	0	0	0	0	0	30	43	0	73	206
04:45 PM	78	0	14	0	92	7	28	0	0	35	0	0	0	0	0	0	28	45	0	73	200
Total	331	0	53	0	384	17	136	0	0	153	0	0	0	0	0	0	108	152	0	260	797
05:00 PM	93	0	11	0	104	6	40	0	0	46	0	0	0	0	0	0	27	51	0	78	228
05:15 PM	86	0	21	0	107	9	43	0	0	52	0	0	0	0	0	0	18	46	0	64	223
05:30 PM	99	0	9	0	108	9	37	0	0	46	0	0	0	0	0	0	24	46	0	70	224
05:45 PM	102	0	10	0	112	4	20	0	0	24	0	0	0	0	0	0	21	35	0	56	192
Total	380	0	51	0	431	28	140	0	0	168	0	0	0	0	0	0	90	178	0	268	867
Grand Total	711	0	104	0	815	45	276	0	0	321	0	0	0	0	0	0	198	330	0	528	1664
Apprch %	87.2	0	12.8	0		14	86	0	0		0	0	0	0		0	37.5	62.5	0		
Total %	42.7	0	6.2	0	49	2.7	16.6	0	0	19.3	0	0	0	0	0	0	11.9	19.8	0	31.7	

Data Collection Group

757.478.6761
LSmith@DataCollectionGroup.net

File Name : 5 Dumfries & Rogues PM
Site Code : 00000005
Start Date : 3/30/2011
Page No : 2

	Rogues From North					Dumfries From East					From South					Dumfries From West					
Start Time	Right	Thru	Left	Peds	App. Total	Right	Thru	Left	Peds	App. Total	Right	Thru	Left	Peds	App. Total	Right	Thru	Left	Peds	App. Total	Int. Total
Peak Hour Analysis From 04:00 PM to 05:45 PM - Peak 1 of 1																					
Peak Hour for Entire Intersection Begins at 04:45 PM																					
04:45 PM	78	0	14	0	92	7	28	0	0	35	0	0	0	0	0	0	**28**	45	0	73	200
05:00 PM	93	0	11	0	104	6	40	0	0	46	0	0	0	0	0	0	27	**51**	0	**78**	**228**
05:15 PM	86	0	**21**	0	107	**9**	**43**	0	0	**52**	0	0	0	0	0	0	18	46	0	64	223
05:30 PM	**99**	0	9	0	**108**	9	37	0	0	46	0	0	0	0	0	0	24	46	0	70	224
Total Volume	356	0	55	0	411	31	148	0	0	179	0	0	0	0	0	0	97	188	0	285	875
% App. Total	86.6	0	13.4	0		17.3	82.7	0	0		0	0	0	0		0	34	66	0		
PHF	.899	.000	.655	.000	.951	.861	.860	.000	.000	.861	.000	.000	.000	.000	.000	.000	.866	.922	.000	.913	.959

Data Collection Group

757.478.6761
LSmith@DataCollectionGroup.net

File Name : 5 Dumfries & Rogues PM
Site Code : 00000005
Start Date : 3/30/2011
Page No : 3

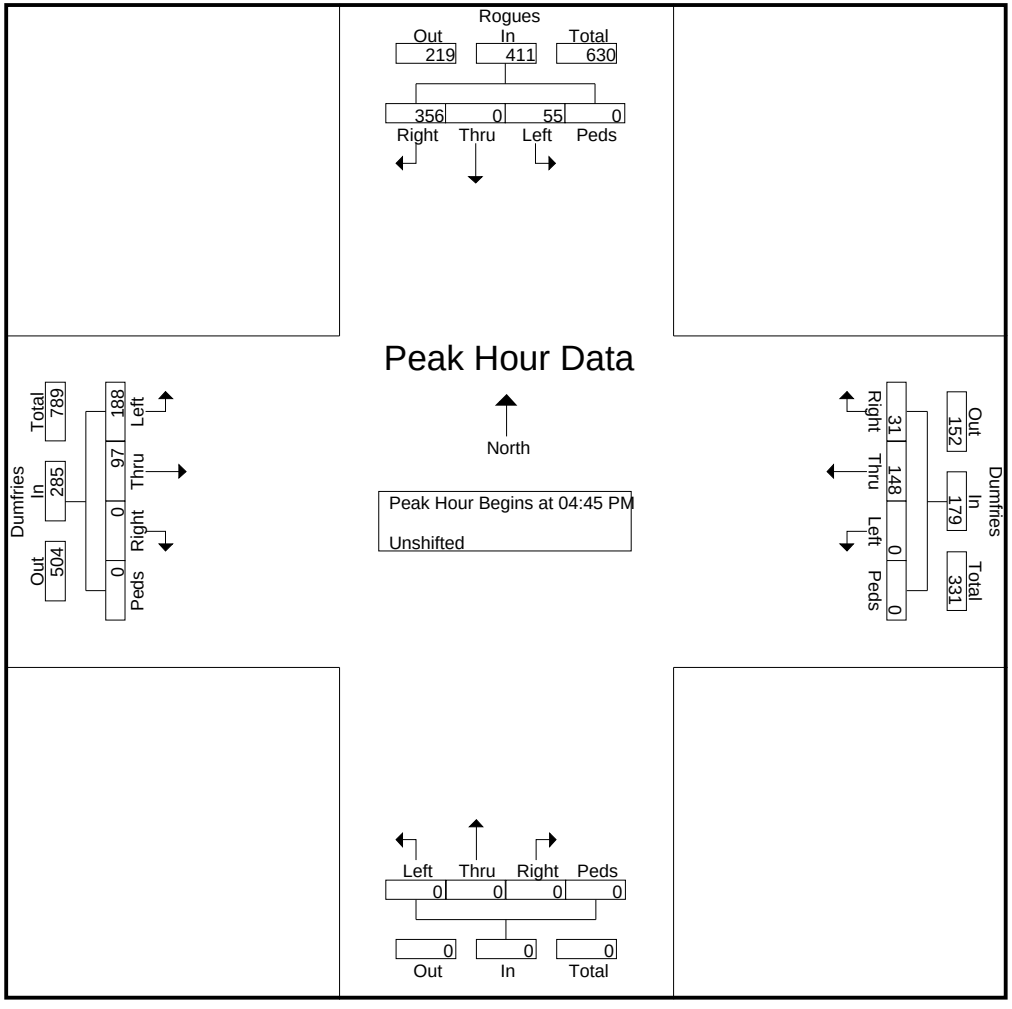

Data Collection Group

757.478.6761
LSmith@DataCollectionGroup.net

File Name : 6 Rogues & Finch AM
Site Code : 00000006
Start Date : 4/6/2011
Page No : 1

Groups Printed- Unshifted

	Rogues From North					From East					Rogues From South					Finch From West					
Start Time	Right	Thru	Left	Peds	App. Total	Right	Thru	Left	Peds	App. Total	Right	Thru	Left	Peds	App. Total	Right	Thru	Left	Peds	App. Total	Int. Total
06:30 AM	0	8	0	0	8	0	0	0	0	0	0	35	29	0	64	5	0	0	0	5	77
06:45 AM	3	15	0	0	18	0	0	0	0	0	0	57	38	0	95	16	0	1	0	17	130
Total	3	23	0	0	26	0	0	0	0	0	0	92	67	0	159	21	0	1	0	22	207
07:00 AM	2	40	0	0	42	0	0	0	0	0	0	42	36	0	78	59	0	1	0	60	180
07:15 AM	0	35	0	0	35	0	0	0	0	0	0	66	63	0	129	63	0	0	0	63	227
07:30 AM	3	19	0	0	22	0	0	0	0	0	0	60	49	0	109	9	0	4	0	13	144
07:45 AM	3	17	0	0	20	0	0	0	0	0	0	50	23	0	73	12	0	1	0	13	106
Total	8	111	0	0	119	0	0	0	0	0	0	218	171	0	389	143	0	6	0	149	657
08:00 AM	0	34	0	0	34	0	0	0	0	0	0	44	30	0	74	12	0	0	0	12	120
08:15 AM	2	33	0	0	35	0	0	0	0	0	0	50	28	0	78	9	0	1	0	10	123
08:30 AM	1	26	0	0	27	0	0	0	0	0	0	42	19	0	61	7	0	1	0	8	96
08:45 AM	3	27	0	0	30	0	0	0	0	0	0	35	20	0	55	5	0	0	0	5	90
Total	6	120	0	0	126	0	0	0	0	0	0	171	97	0	268	33	0	2	0	35	429
Grand Total	17	254	0	0	271	0	0	0	0	0	0	481	335	0	816	197	0	9	0	206	1293
Apprch %	6.3	93.7	0	0		0	0	0	0		0	58.9	41.1	0		95.6	0	4.4	0		
Total %	1.3	19.6	0	0	21	0	0	0	0	0	0	37.2	25.9	0	63.1	15.2	0	0.7	0	15.9	

Data Collection Group

757.478.6761
LSmith@DataCollectionGroup.net

File Name : 6 Rogues & Finch AM
Site Code : 00000006
Start Date : 4/6/2011
Page No : 2

	Rogues From North					From East					Rogues From South					Finch From West					
Start Time	Right	Thru	Left	Peds	App. Total	Right	Thru	Left	Peds	App. Total	Right	Thru	Left	Peds	App. Total	Right	Thru	Left	Peds	App. Total	Int. Total
Peak Hour Analysis From 06:30 AM to 08:45 AM - Peak 1 of 1																					
Peak Hour for Entire Intersection Begins at 06:45 AM																					
06:45 AM	**3**	15	0	0	18	0	0	0	0	0	0	57	38	0	95	16	0	1	0	17	130
07:00 AM	2	**40**	0	0	**42**	0	0	0	0	0	0	42	36	0	78	59	0	1	0	60	180
07:15 AM	0	35	0	0	35	0	0	0	0	0	0	**66**	**63**	0	**129**	**63**	0	0	0	**63**	**227**
07:30 AM	3	19	0	0	22	0	0	0	0	0	0	60	49	0	109	9	0	**4**	0	13	144
Total Volume	8	109	0	0	117	0	0	0	0	0	0	225	186	0	411	147	0	6	0	153	681
% App. Total	6.8	93.2	0	0		0	0	0	0		0	54.7	45.3	0		96.1	0	3.9	0		
PHF	.667	.681	.000	.000	.696	.000	.000	.000	.000	.000	.000	.852	.738	.000	.797	.583	.000	.375	.000	.607	.750

Data Collection Group

757.478.6761
LSmith@DataCollectionGroup.net

File Name : 6 Rogues & Finch AM
Site Code : 00000006
Start Date : 4/6/2011
Page No : 3

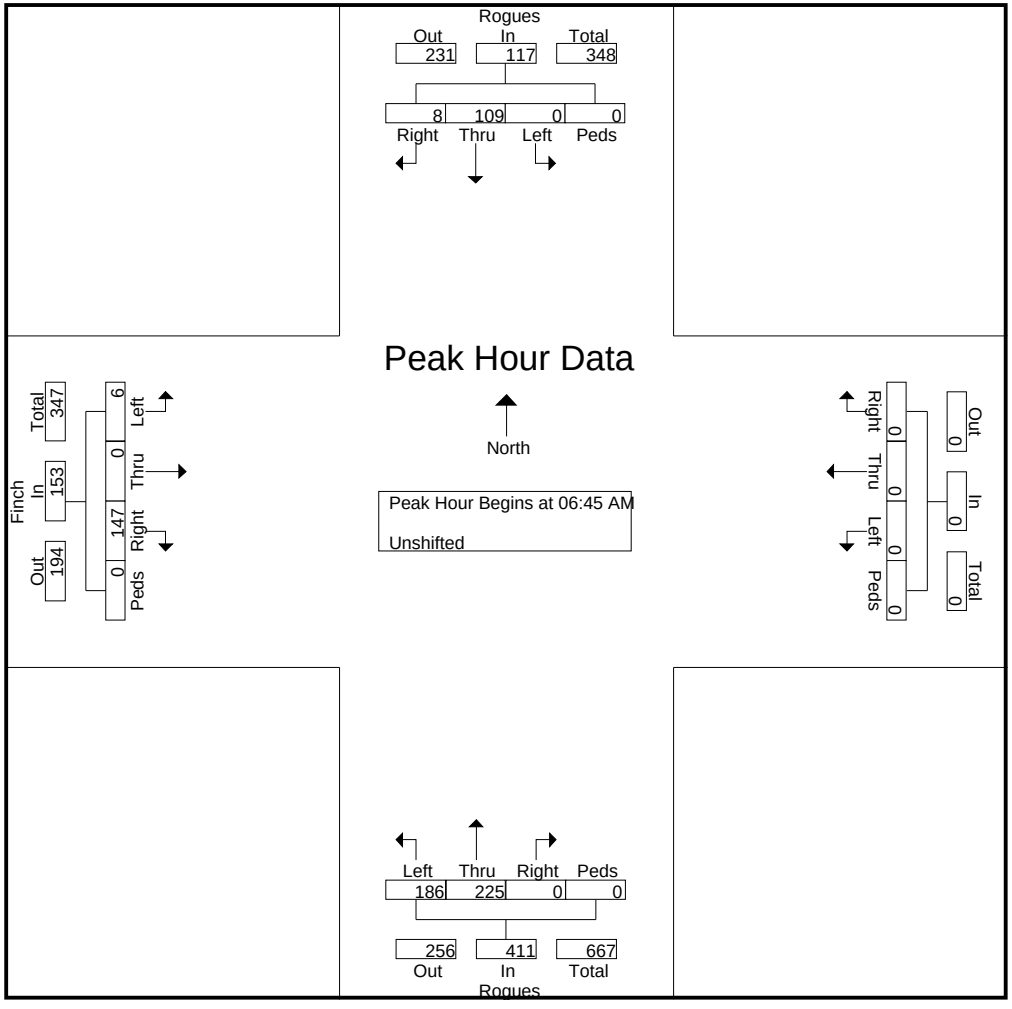

Data Collection Group

757.478.6761
LSmith@DataCollectionGroup.net

File Name : 6 Rogues & Finch PM
Site Code : 00000006
Start Date : 4/6/2011
Page No : 1

Groups Printed- Unshifted

	Rogues From North					From East					Rogues From South					Finch From West					
Start Time	Right	Thru	Left	Peds	App. Total	Right	Thru	Left	Peds	App. Total	Right	Thru	Left	Peds	App. Total	Right	Thru	Left	Peds	App. Total	Int. Total
04:00 PM	0	50	0	0	50	0	0	0	0	0	0	24	17	0	41	34	0	2	0	36	127
04:15 PM	3	63	0	0	66	0	0	0	0	0	0	25	16	0	41	20	0	5	0	25	132
04:30 PM	2	72	0	0	74	0	0	0	0	0	0	27	14	0	41	39	0	1	0	40	155
04:45 PM	1	90	0	0	91	0	0	0	0	0	0	32	18	0	50	41	0	2	0	43	184
Total	6	275	0	0	281	0	0	0	0	0	0	108	65	0	173	134	0	10	0	144	598
05:00 PM	2	72	0	0	74	0	0	0	0	0	0	20	20	0	40	64	0	1	0	65	179
05:15 PM	0	82	0	0	82	0	0	0	0	0	0	20	31	0	51	37	0	3	0	40	173
05:30 PM	2	92	0	0	94	0	0	0	0	0	0	19	34	0	53	45	0	3	0	48	195
05:45 PM	2	73	0	0	75	0	0	0	0	0	0	25	39	0	64	41	0	3	0	44	183
Total	6	319	0	0	325	0	0	0	0	0	0	84	124	0	208	187	0	10	0	197	730
Grand Total	12	594	0	0	606	0	0	0	0	0	0	192	189	0	381	321	0	20	0	341	1328
Apprch %	2	98	0	0		0	0	0	0		0	50.4	49.6	0		94.1	0	5.9	0		
Total %	0.9	44.7	0	0	45.6	0	0	0	0	0	0	14.5	14.2	0	28.7	24.2	0	1.5	0	25.7	

Data Collection Group

757.478.6761
LSmith@DataCollectionGroup.net

File Name : 6 Rogues & Finch PM
Site Code : 00000006
Start Date : 4/6/2011
Page No : 2

	Rogues From North					From East					Rogues From South					Finch From West					
Start Time	Right	Thru	Left	Peds	App. Total	Right	Thru	Left	Peds	App. Total	Right	Thru	Left	Peds	App. Total	Right	Thru	Left	Peds	App. Total	Int. Total
Peak Hour Analysis From 04:00 PM to 05:45 PM - Peak 1 of 1																					
Peak Hour for Entire Intersection Begins at 04:45 PM																					
04:45 PM	1	90	0	0	91	0	0	0	0	0	0	**32**	18	0	50	41	0	2	0	43	184
05:00 PM	**2**	72	0	0	74	0	0	0	0	0	0	20	20	0	40	**64**	0	1	0	**65**	179
05:15 PM	0	82	0	0	82	0	0	0	0	0	0	20	31	0	51	37	0	**3**	0	40	173
05:30 PM	2	**92**	0	0	**94**	0	0	0	0	0	0	19	**34**	0	**53**	45	0	3	0	48	**195**
Total Volume	5	336	0	0	341	0	0	0	0	0	0	91	103	0	194	187	0	9	0	196	731
% App. Total	1.5	98.5	0	0		0	0	0	0		0	46.9	53.1	0		95.4	0	4.6	0		
PHF	.625	.913	.000	.000	.907	.000	.000	.000	.000	.000	.000	.711	.757	.000	.915	.730	.000	.750	.000	.754	.937

Data Collection Group

757.478.6761
LSmith@DataCollectionGroup.net

File Name : 6 Rogues & Finch PM
Site Code : 00000006
Start Date : 4/6/2011
Page No : 3

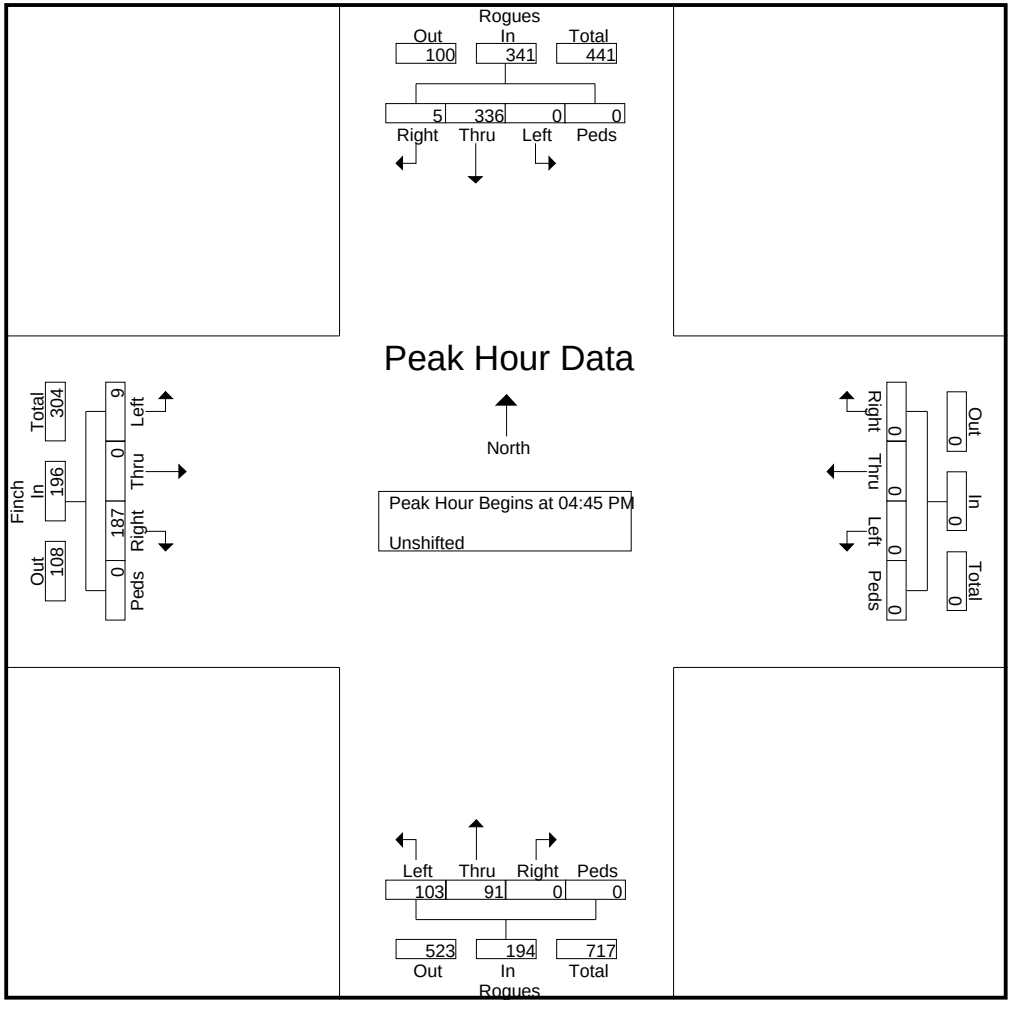

Data Collection Group

757.478.6761
LSmith@DataCollectionGroup.net

File Name : 7 Broad Run Church & Shepherdstown AM
Site Code : 00000009
Start Date : 4/5/2011
Page No : 1

Groups Printed- Unshifted

	From North					Broad Run Church From East					Shepherdstown From South					Broad Run Church From West					
Start Time	Right	Thru	Left	Peds	App. Total	Right	Thru	Left	Peds	App. Total	Right	Thru	Left	Peds	App. Total	Right	Thru	Left	Peds	App. Total	Int. Total
06:30 AM	0	0	0	0	0	0	4	0	0	4	1	0	3	0	4	10	41	0	0	51	59
06:45 AM	0	0	0	0	0	0	5	1	0	6	0	0	4	0	4	28	26	0	0	54	64
Total	0	0	0	0	0	0	9	1	0	10	1	0	7	0	8	38	67	0	0	105	123
07:00 AM	0	0	0	0	0	0	15	0	0	15	1	0	13	0	14	56	33	0	0	89	118
07:15 AM	0	0	0	0	0	0	5	0	0	5	4	0	24	0	28	39	52	0	0	91	124
07:30 AM	0	0	0	0	0	0	17	0	0	17	0	0	19	0	19	13	38	0	0	51	87
07:45 AM	0	0	0	0	0	0	7	0	0	7	1	0	3	0	4	19	33	0	0	52	63
Total	0	0	0	0	0	0	44	0	0	44	6	0	59	0	65	127	156	0	0	283	392
08:00 AM	0	0	0	0	0	0	10	0	0	10	1	0	16	0	17	17	34	0	0	51	78
08:15 AM	0	0	0	0	0	0	8	1	0	9	0	0	11	0	11	11	33	0	0	44	64
08:30 AM	0	0	0	0	0	0	10	1	0	11	7	0	3	0	10	14	23	0	0	37	58
08:45 AM	0	0	0	0	0	0	12	0	0	12	1	0	6	0	7	7	21	0	0	28	47
Total	0	0	0	0	0	0	40	2	0	42	9	0	36	0	45	49	111	0	0	160	247
Grand Total	0	0	0	0	0	0	93	3	0	96	16	0	102	0	118	214	334	0	0	548	762
Apprch %	0	0	0	0		0	96.9	3.1	0		13.6	0	86.4	0		39.1	60.9	0	0		
Total %	0	0	0	0	0	0	12.2	0.4	0	12.6	2.1	0	13.4	0	15.5	28.1	43.8	0	0	71.9	

Data Collection Group

757.478.6761
LSmith@DataCollectionGroup.net

File Name : 7 Broad Run Church & Shepherdstown AM
Site Code : 00000009
Start Date : 4/5/2011
Page No : 2

	From North					Broad Run Church From East					Shepherdstown From South					Broad Run Church From West					
Start Time	Right	Thru	Left	Peds	App. Total	Right	Thru	Left	Peds	App. Total	Right	Thru	Left	Peds	App. Total	Right	Thru	Left	Peds	App. Total	Int. Total
Peak Hour Analysis From 06:30 AM to 08:45 AM - Peak 1 of 1																					
Peak Hour for Entire Intersection Begins at 06:45 AM																					
06:45 AM	0	0	0	0	0	0	5	**1**	0	6	0	0	4	0	4	28	26	0	0	54	64
07:00 AM	0	0	0	0	0	0	15	0	0	15	1	0	13	0	14	**56**	33	0	0	89	118
07:15 AM	0	0	0	0	0	0	5	0	0	5	**4**	0	**24**	0	**28**	39	**52**	0	0	**91**	**124**
07:30 AM	0	0	0	0	0	0	**17**	0	0	**17**	0	0	19	0	19	13	38	0	0	51	87
Total Volume	0	0	0	0	0	0	42	1	0	43	5	0	60	0	65	136	149	0	0	285	393
% App. Total	0	0	0	0		0	97.7	2.3	0		7.7	0	92.3	0		47.7	52.3	0	0		
PHF	.000	.000	.000	.000	.000	.000	.618	.250	.000	.632	.313	.000	.625	.000	.580	.607	.716	.000	.000	.783	.792

Data Collection Group

757.478.6761
LSmith@DataCollectionGroup.net

File Name : 7 Broad Run Church & Shepherdstown AM
Site Code : 00000009
Start Date : 4/5/2011
Page No : 3

Peak Hour Data

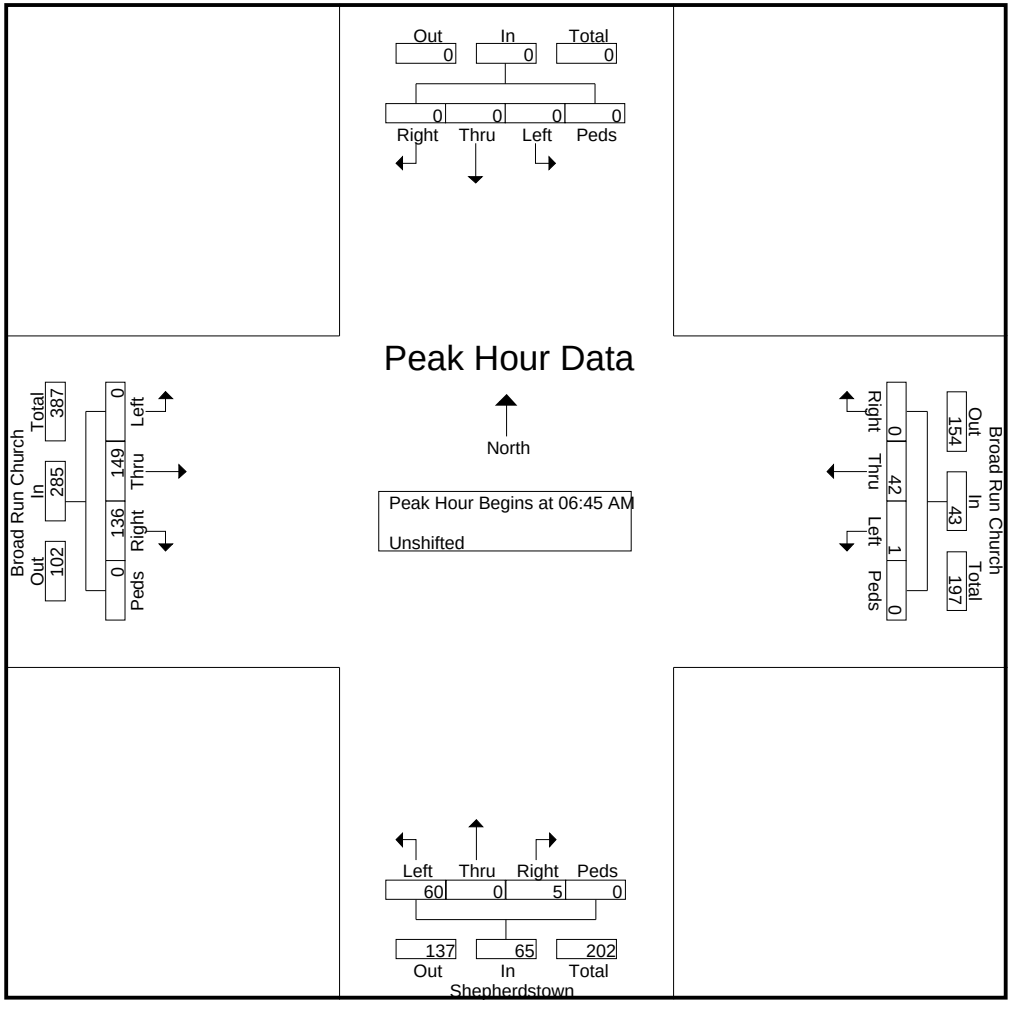

Data Collection Group

757.478.6761
LSmith@DataCollectionGroup.net

File Name : 7 Broad Run Church & Shepherdstown
Site Code : 00000009
Start Date : 4/5/2011
Page No : 1

Groups Printed- Unshifted

	From North					Broad Run Church From East					Shepherdstown From South					Broad Run Church From West					
Start Time	Right	Thru	Left	Peds	App. Total	Right	Thru	Left	Peds	App. Total	Right	Thru	Left	Peds	App. Total	Right	Thru	Left	Peds	App. Total	Int. Total
04:00 PM	0	0	0	0	0	0	27	0	0	27	0	0	17	0	17	10	15	0	0	25	69
04:15 PM	0	0	0	0	0	0	40	3	0	43	1	0	8	0	9	13	5	0	0	18	70
04:30 PM	0	0	0	0	0	0	33	2	0	35	0	0	12	0	12	12	20	0	0	32	79
04:45 PM	0	0	0	0	0	0	28	1	0	29	1	0	17	0	18	7	13	0	0	20	67
Total	0	0	0	0	0	0	128	6	0	134	2	0	54	0	56	42	53	0	0	95	285
05:00 PM	0	0	0	0	0	0	34	1	0	35	4	0	14	0	18	13	9	0	0	22	75
05:15 PM	0	0	0	0	0	0	37	1	0	38	1	0	21	0	22	22	19	0	0	41	101
05:30 PM	0	0	0	0	0	0	28	0	0	28	0	0	10	0	10	9	12	0	0	21	59
05:45 PM	0	0	0	0	0	0	35	1	0	36	1	0	6	0	7	19	12	0	0	31	74
Total	0	0	0	0	0	0	134	3	0	137	6	0	51	0	57	63	52	0	0	115	309
Grand Total	0	0	0	0	0	0	262	9	0	271	8	0	105	0	113	105	105	0	0	210	594
Apprch %	0	0	0	0		0	96.7	3.3	0		7.1	0	92.9	0		50	50	0	0		
Total %	0	0	0	0	0	0	44.1	1.5	0	45.6	1.3	0	17.7	0	19	17.7	17.7	0	0	35.4	

Data Collection Group

757.478.6761
LSmith@DataCollectionGroup.net

File Name : 7 Broad Run Church & Shepherdstown
Site Code : 00000009
Start Date : 4/5/2011
Page No : 2

	From North					Broad Run Church From East					Shepherdstown From South					Broad Run Church From West					
Start Time	Right	Thru	Left	Peds	App. Total	Right	Thru	Left	Peds	App. Total	Right	Thru	Left	Peds	App. Total	Right	Thru	Left	Peds	App. Total	Int. Total
Peak Hour Analysis From 04:00 PM to 05:45 PM - Peak 1 of 1																					
Peak Hour for Entire Intersection Begins at 04:30 PM																					
04:30 PM	0	0	0	0	0	0	33	**2**	0	35	0	0	12	0	12	12	**20**	0	0	32	79
04:45 PM	0	0	0	0	0	0	28	1	0	29	1	0	17	0	18	7	13	0	0	20	67
05:00 PM	0	0	0	0	0	0	34	1	0	35	**4**	0	14	0	18	13	9	0	0	22	75
05:15 PM	0	0	0	0	0	0	**37**	1	0	**38**	1	0	**21**	0	**22**	**22**	19	0	0	**41**	**101**
Total Volume	0	0	0	0	0	0	132	5	0	137	6	0	64	0	70	54	61	0	0	115	322
% App. Total	0	0	0	0		0	96.4	3.6	0		8.6	0	91.4	0		47	53	0	0		
PHF	.000	.000	.000	.000	.000	.000	.892	.625	.000	.901	.375	.000	.762	.000	.795	.614	.763	.000	.000	.701	.797

Data Collection Group

757.478.6761
LSmith@DataCollectionGroup.net

File Name : 7 Broad Run Church & Shepherdstown
Site Code : 00000009
Start Date : 4/5/2011
Page No : 3

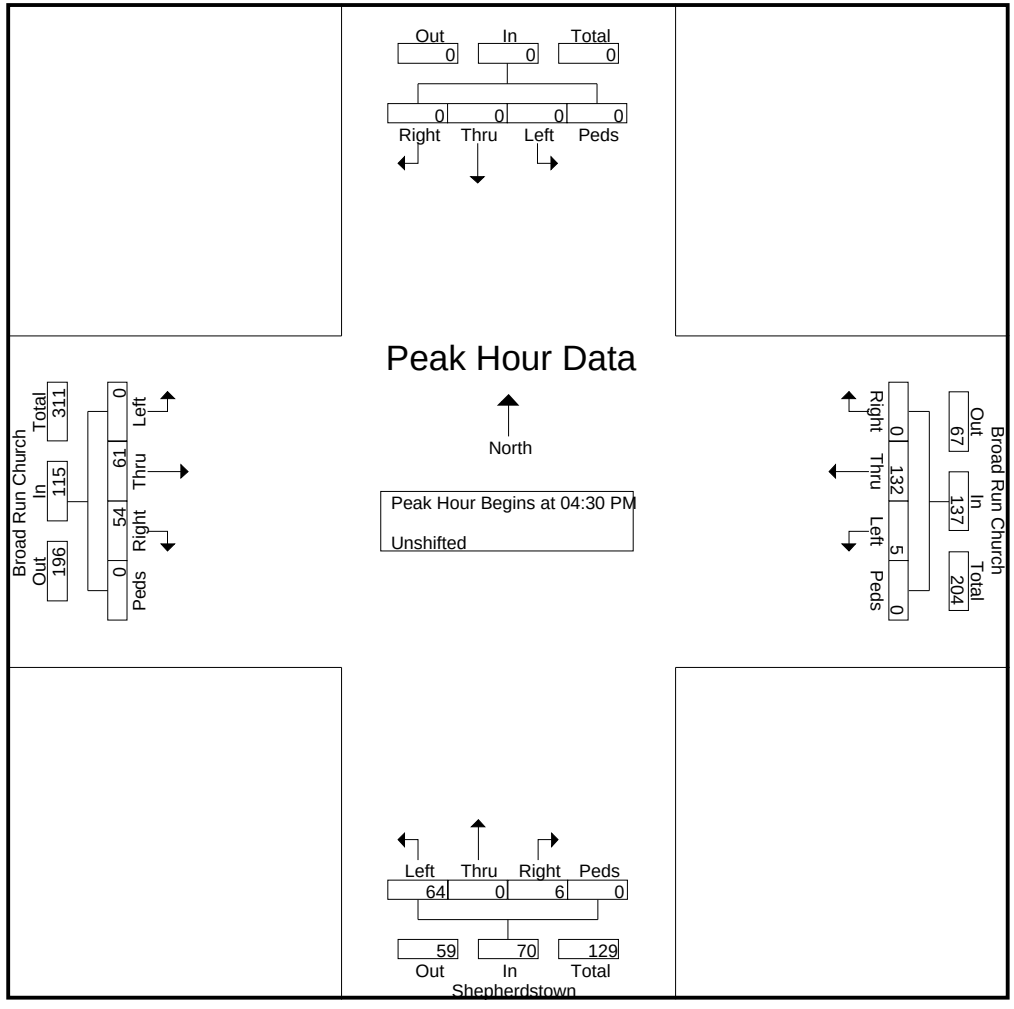

Data Collection Group

757.478.6761
LSmith@DataCollectionGroup.net

File Name : 8 Broad Run Church & Vint Hill Rd AM
Site Code : 00000008
Start Date : 3/30/2011
Page No : 1

Groups Printed- Unshifted

	Vint Hill Rd From North					From East					Vint Hill Rd From South					Broad Run Church From West					
Start Time	Right	Thru	Left	Peds	App. Total	Right	Thru	Left	Peds	App. Total	Right	Thru	Left	Peds	App. Total	Right	Thru	Left	Peds	App. Total	Int. Total
06:30 AM	0	69	0	0	69	0	0	0	0	0	0	62	6	0	68	33	0	8	0	41	178
06:45 AM	0	75	0	0	75	0	0	0	0	0	0	66	7	0	73	32	0	10	0	42	190
Total	0	144	0	0	144	0	0	0	0	0	0	128	13	0	141	65	0	18	0	83	368
07:00 AM	1	75	0	0	76	0	0	0	0	0	0	49	5	0	54	34	0	5	0	39	169
07:15 AM	0	82	0	0	82	0	0	0	0	0	0	78	9	0	87	41	0	7	0	48	217
07:30 AM	2	80	0	0	82	0	0	0	0	0	0	101	11	0	112	30	0	4	0	34	228
07:45 AM	0	62	0	0	62	0	0	0	0	0	0	71	5	0	76	38	0	3	0	41	179
Total	3	299	0	0	302	0	0	0	0	0	0	299	30	0	329	143	0	19	0	162	793
08:00 AM	2	73	0	0	75	0	0	0	0	0	0	81	5	0	86	36	0	3	0	39	200
08:15 AM	2	73	0	0	75	0	0	0	0	0	0	71	11	0	82	24	0	7	0	31	188
08:30 AM	0	71	0	0	71	0	0	0	0	0	0	78	10	0	88	29	0	5	0	34	193
08:45 AM	1	82	0	0	83	0	0	0	0	0	0	62	6	0	68	18	0	5	0	23	174
Total	5	299	0	0	304	0	0	0	0	0	0	292	32	0	324	107	0	20	0	127	755
Grand Total	8	742	0	0	750	0	0	0	0	0	0	719	75	0	794	315	0	57	0	372	1916
Apprch %	1.1	98.9	0	0		0	0	0	0		0	90.6	9.4	0		84.7	0	15.3	0		
Total %	0.4	38.7	0	0	39.1	0	0	0	0	0	0	37.5	3.9	0	41.4	16.4	0	3	0	19.4	

Data Collection Group

757.478.6761
LSmith@DataCollectionGroup.net

File Name : 8 Broad Run Church & Vint Hill Rd AM
Site Code : 00000008
Start Date : 3/30/2011
Page No : 2

	Vint Hill Rd From North					From East					Vint Hill Rd From South					Broad Run Church From West					
Start Time	Right	Thru	Left	Peds	App. Total	Right	Thru	Left	Peds	App. Total	Right	Thru	Left	Peds	App. Total	Right	Thru	Left	Peds	App. Total	Int. Total
Peak Hour Analysis From 06:30 AM to 08:45 AM - Peak 1 of 1																					
Peak Hour for Entire Intersection Begins at 07:15 AM																					
07:15 AM	0	**82**	0	0	**82**	0	0	0	0	0	0	78	9	0	87	**41**	0	**7**	0	**48**	217
07:30 AM	**2**	80	0	0	82	0	0	0	0	0	0	**101**	**11**	0	**112**	30	0	4	0	34	**228**
07:45 AM	0	62	0	0	62	0	0	0	0	0	0	71	5	0	76	38	0	3	0	41	179
08:00 AM	2	73	0	0	75	0	0	0	0	0	0	81	5	0	86	36	0	3	0	39	200
Total Volume	4	297	0	0	301	0	0	0	0	0	0	331	30	0	361	145	0	17	0	162	824
% App. Total	1.3	98.7	0	0		0	0	0	0		0	91.7	8.3	0		89.5	0	10.5	0		
PHF	.500	.905	.000	.000	.918	.000	.000	.000	.000	.000	.000	.819	.682	.000	.806	.884	.000	.607	.000	.844	.904

Data Collection Group

757.478.6761
LSmith@DataCollectionGroup.net

File Name : 8 Broad Run Church & Vint Hill Rd AM
Site Code : 00000008
Start Date : 3/30/2011
Page No : 3

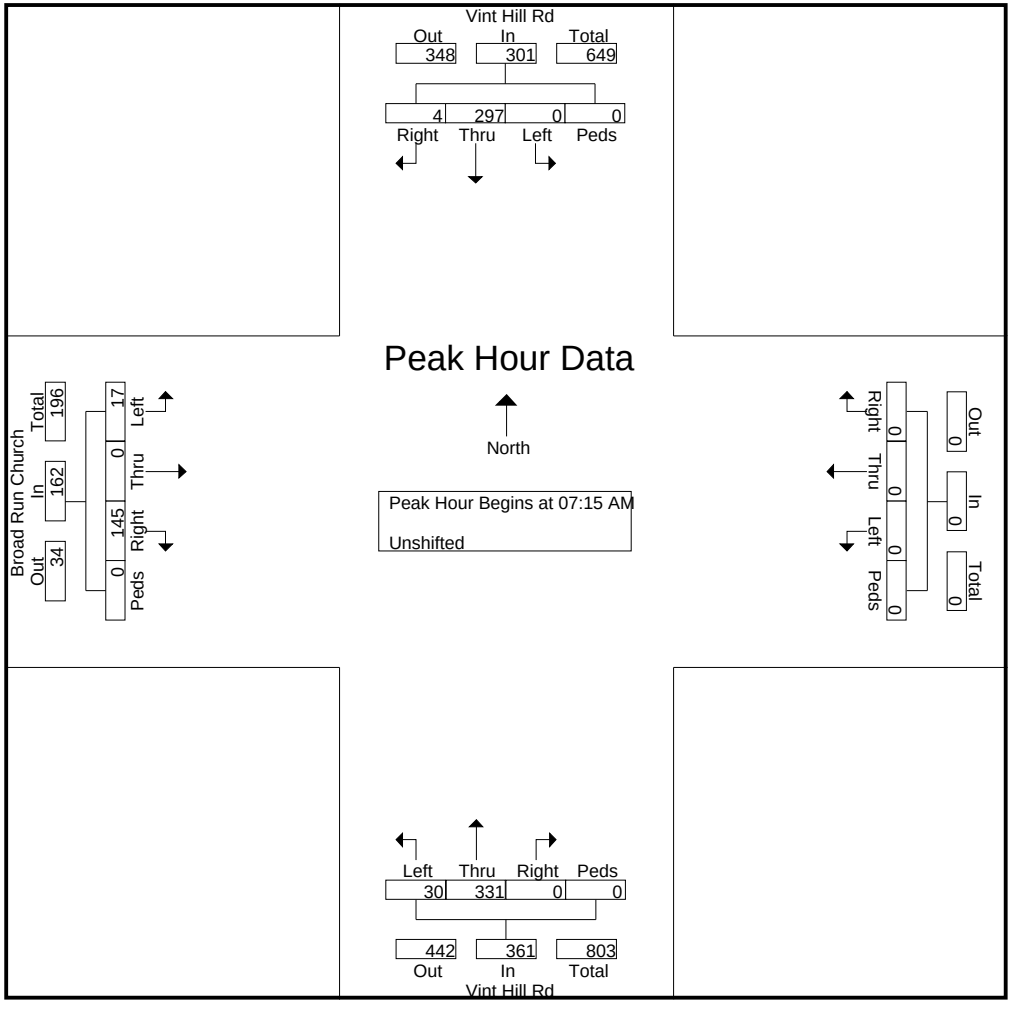

Data Collection Group

757.478.6761
LSmith@DataCollectionGroup.net

File Name : 8 Broad Run Church & Vint Hill Rd PM
Site Code : 00000008
Start Date : 3/30/2011
Page No : 1

Groups Printed- Unshifted

	Vint Hill Rd From North					From East					Vint Hill Rd From South					Borad Run Church From West					
Start Time	Right	Thru	Left	Peds	App. Total	Right	Thru	Left	Peds	App. Total	Right	Thru	Left	Peds	App. Total	Right	Thru	Left	Peds	App. Total	Int. Total
04:00 PM	4	78	0	0	82	0	0	0	0	0	0	72	28	0	100	13	0	2	0	15	197
04:15 PM	6	53	0	0	59	0	0	0	0	0	0	87	30	0	117	5	0	2	0	7	183
04:30 PM	5	83	0	0	88	0	0	0	0	0	0	73	25	0	98	8	0	5	0	13	199
04:45 PM	1	69	0	0	70	0	0	0	0	0	0	67	40	0	107	11	0	5	0	16	193
Total	16	283	0	0	299	0	0	0	0	0	0	299	123	0	422	37	0	14	0	51	772
05:00 PM	3	75	0	0	78	0	0	0	0	0	0	74	20	0	94	19	0	2	0	21	193
05:15 PM	7	96	0	0	103	0	0	0	0	0	0	57	40	0	97	11	0	2	0	13	213
05:30 PM	3	66	0	0	69	0	0	0	0	0	0	85	43	0	128	11	0	1	0	12	209
05:45 PM	8	78	0	0	86	0	0	0	0	0	0	66	27	0	93	5	0	4	0	9	188
Total	21	315	0	0	336	0	0	0	0	0	0	282	130	0	412	46	0	9	0	55	803
Grand Total	37	598	0	0	635	0	0	0	0	0	0	581	253	0	834	83	0	23	0	106	1575
Apprch %	5.8	94.2	0	0		0	0	0	0		0	69.7	30.3	0		78.3	0	21.7	0		
Total %	2.3	38	0	0	40.3	0	0	0	0	0	0	36.9	16.1	0	53	5.3	0	1.5	0	6.7	

Data Collection Group

757.478.6761
LSmith@DataCollectionGroup.net

File Name : 8 Broad Run Church & Vint Hill Rd PM
Site Code : 00000008
Start Date : 3/30/2011
Page No : 2

	Vint Hill Rd From North					From East					Vint Hill Rd From South					Borad Run Church From West					
Start Time	Right	Thru	Left	Peds	App. Total	Right	Thru	Left	Peds	App. Total	Right	Thru	Left	Peds	App. Total	Right	Thru	Left	Peds	App. Total	Int. Total
Peak Hour Analysis From 04:00 PM to 05:45 PM - Peak 1 of 1																					
Peak Hour for Entire Intersection Begins at 04:45 PM																					
04:45 PM	1	69	0	0	70	0	0	0	0	0	0	67	40	0	107	11	0	**5**	0	16	193
05:00 PM	3	75	0	0	78	0	0	0	0	0	0	74	20	0	94	**19**	0	2	0	**21**	193
05:15 PM	**7**	**96**	0	0	**103**	0	0	0	0	0	0	57	40	0	97	11	0	2	0	13	**213**
05:30 PM	3	66	0	0	69	0	0	0	0	0	0	**85**	**43**	0	**128**	11	0	1	0	12	209
Total Volume	14	306	0	0	320	0	0	0	0	0	0	283	143	0	426	52	0	10	0	62	808
% App. Total	4.4	95.6	0	0		0	0	0	0		0	66.4	33.6	0		83.9	0	16.1	0		
PHF	.500	.797	.000	.000	.777	.000	.000	.000	.000	.000	.000	.832	.831	.000	.832	.684	.000	.500	.000	.738	.948

Data Collection Group

757.478.6761
LSmith@DataCollectionGroup.net

File Name : 8 Broad Run Church & Vint Hill Rd PM
Site Code : 00000008
Start Date : 3/30/2011
Page No : 3

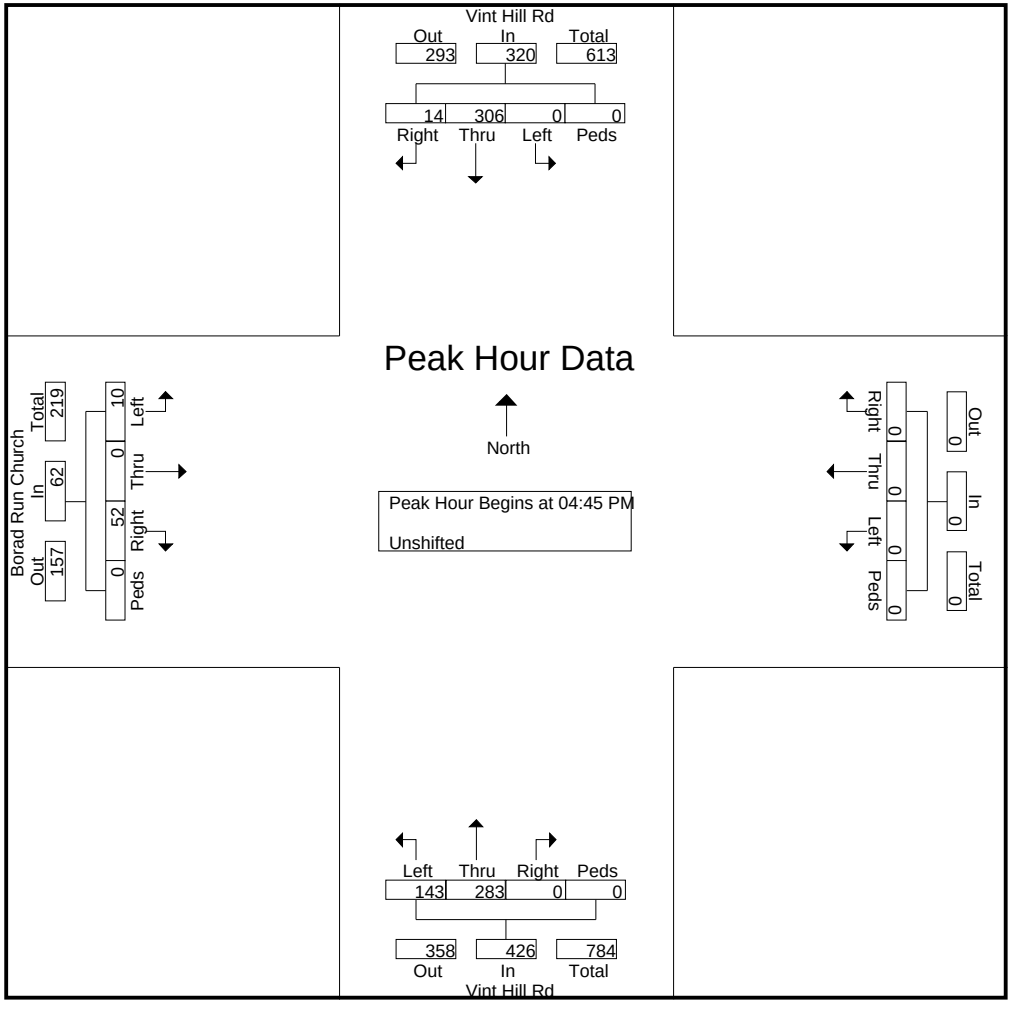

Data Collection Group

757.478.6761
LSmith@DataCollectionGroup.net

File Name : 9 Rte 215 & Vint Hill Pkwy AM
Site Code : 00000009
Start Date : 4/5/2011
Page No : 1

Groups Printed- Unshifted

	From North					From East					From South					From West					
Start Time	Right	Thru	Left	Peds	App. Total	Right	Thru	Left	Peds	App. Total	Right	Thru	Left	Peds	App. Total	Right	Thru	Left	Peds	App. Total	Int. Total
06:30 AM	0	0	0	0	0	0	36	4	0	40	2	0	6	0	8	33	51	0	0	84	132
06:45 AM	0	0	0	0	0	0	35	4	0	39	2	0	9	0	11	42	54	0	0	96	146
Total	0	0	0	0	0	0	71	8	0	79	4	0	15	0	19	75	105	0	0	180	278
07:00 AM	0	0	0	0	0	0	34	11	0	45	3	0	9	0	12	32	60	0	0	92	149
07:15 AM	0	0	0	0	0	0	50	9	0	59	0	0	4	0	4	31	69	0	0	100	163
07:30 AM	0	0	0	0	0	0	73	11	0	84	3	0	5	0	8	26	82	0	0	108	200
07:45 AM	0	0	0	0	0	0	57	15	0	72	1	0	6	0	7	26	59	0	0	85	164
Total	0	0	0	0	0	0	214	46	0	260	7	0	24	0	31	115	270	0	0	385	676
08:00 AM	0	0	0	0	0	0	47	9	0	56	8	0	10	0	18	28	50	0	0	78	152
08:15 AM	0	0	0	0	0	0	45	9	0	54	8	0	8	0	16	12	60	0	0	72	142
08:30 AM	0	0	0	0	0	0	52	5	0	57	3	0	10	0	13	26	45	0	0	71	141
08:45 AM	0	0	0	0	0	0	45	8	0	53	5	0	10	0	15	25	50	0	0	75	143
Total	0	0	0	0	0	0	189	31	0	220	24	0	38	0	62	91	205	0	0	296	578
Grand Total	0	0	0	0	0	0	474	85	0	559	35	0	77	0	112	281	580	0	0	861	1532
Apprch %	0	0	0	0		0	84.8	15.2	0		31.2	0	68.8	0		32.6	67.4	0	0		
Total %	0	0	0	0	0	0	30.9	5.5	0	36.5	2.3	0	5	0	7.3	18.3	37.9	0	0	56.2	

Data Collection Group

757.478.6761
LSmith@DataCollectionGroup.net

File Name : 9 Rte 215 & Vint Hill Pkwy AM
Site Code : 00000009
Start Date : 4/5/2011
Page No : 2

	From North					From East					From South					From West					
Start Time	Right	Thru	Left	Peds	App. Total	Right	Thru	Left	Peds	App. Total	Right	Thru	Left	Peds	App. Total	Right	Thru	Left	Peds	App. Total	Int. Total
Peak Hour Analysis From 06:30 AM to 08:45 AM - Peak 1 of 1																					
Peak Hour for Entire Intersection Begins at 07:15 AM																					
07:15 AM	0	0	0	0	0	0	50	9	0	59	0	0	4	0	4	**31**	69	0	0	100	163
07:30 AM	0	0	0	0	0	0	**73**	11	0	**84**	3	0	5	0	8	26	**82**	0	0	**108**	**200**
07:45 AM	0	0	0	0	0	0	57	**15**	0	72	1	0	6	0	7	26	59	0	0	85	164
08:00 AM	0	0	0	0	0	0	47	9	0	56	**8**	0	**10**	0	**18**	28	50	0	0	78	152
Total Volume	0	0	0	0	0	0	227	44	0	271	12	0	25	0	37	111	260	0	0	371	679
% App. Total	0	0	0	0		0	83.8	16.2	0		32.4	0	67.6	0		29.9	70.1	0	0		
PHF	.000	.000	.000	.000	.000	.000	.777	.733	.000	.807	.375	.000	.625	.000	.514	.895	.793	.000	.000	.859	.849

Data Collection Group

757.478.6761
LSmith@DataCollectionGroup.net

File Name : 9 Rte 215 & Vint Hill Pkwy AM
Site Code : 00000009
Start Date : 4/5/2011
Page No : 3

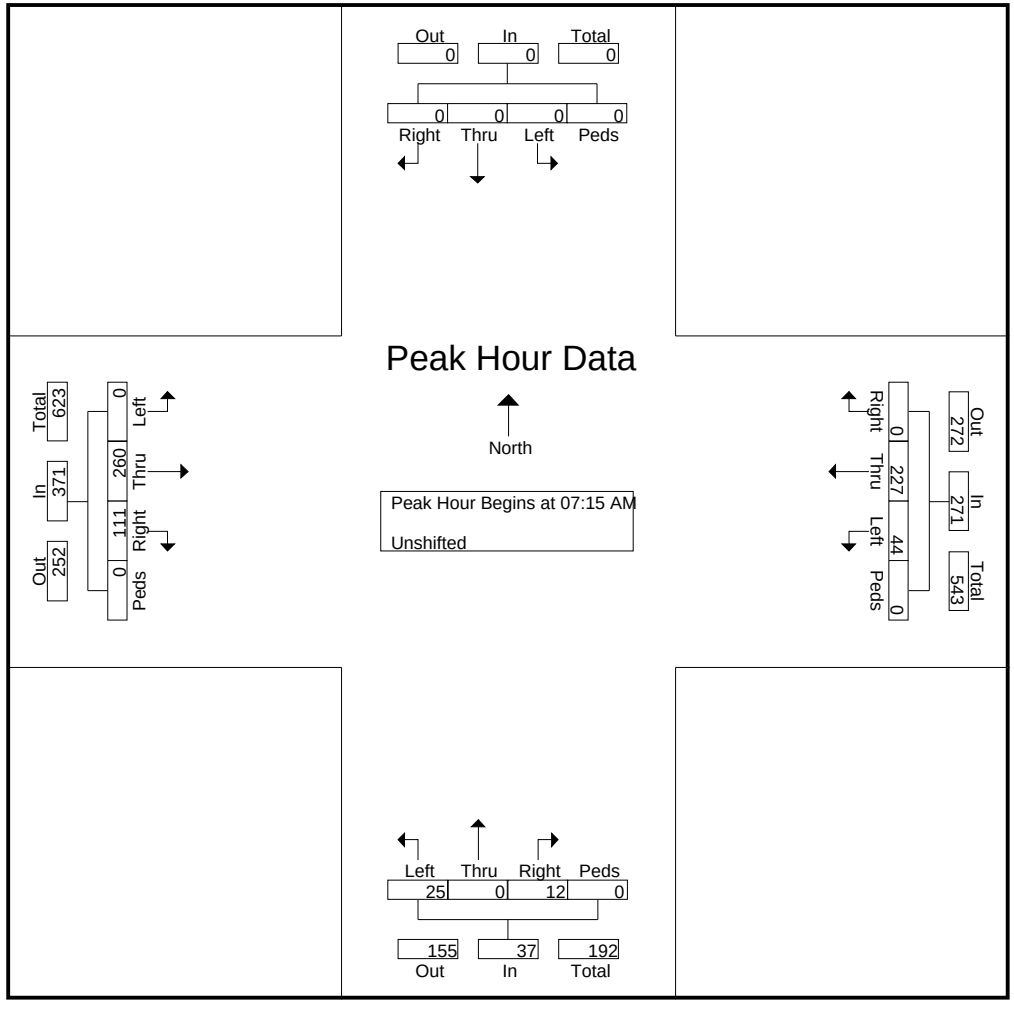

Data Collection Group

757.478.6761
LSmith@DataCollectionGroup.net

File Name : 9 Rte 215 & Vint Hill Pkwy PM
Site Code : 00000009
Start Date : 4/5/2011
Page No : 1

Groups Printed- Unshifted

	From North					Rte 215 Vint Hill Rd From East					Vint Hill Pkwy From South					Rte 215 Vint Hill Rd From West					
Start Time	Right	Thru	Left	Peds	App. Total	Right	Thru	Left	Peds	App. Total	Right	Thru	Left	Peds	App. Total	Right	Thru	Left	Peds	App. Total	Int. Total
04:00 PM	0	0	0	0	0	0	49	8	0	57	6	0	46	0	52	12	51	0	0	63	172
04:15 PM	0	0	0	0	0	0	62	2	0	64	8	0	20	0	28	7	57	0	0	64	156
04:30 PM	0	0	0	0	0	0	67	5	0	72	8	0	25	0	33	6	54	0	0	60	165
04:45 PM	0	0	0	0	0	0	58	3	0	61	5	0	16	0	21	8	66	0	0	74	156
Total	0	0	0	0	0	0	236	18	0	254	27	0	107	0	134	33	228	0	0	261	649
05:00 PM	0	0	0	0	0	0	58	6	0	64	9	0	20	0	29	6	60	0	0	66	159
05:15 PM	0	0	0	0	0	0	77	9	0	86	5	0	22	0	27	7	70	0	0	77	190
05:30 PM	0	0	0	0	0	0	69	4	0	73	12	0	12	0	24	6	45	0	0	51	148
05:45 PM	0	0	0	0	0	0	53	4	0	57	7	0	16	0	23	4	55	0	0	59	139
Total	0	0	0	0	0	0	257	23	0	280	33	0	70	0	103	23	230	0	0	253	636
Grand Total	0	0	0	0	0	0	493	41	0	534	60	0	177	0	237	56	458	0	0	514	1285
Apprch %	0	0	0	0		0	92.3	7.7	0		25.3	0	74.7	0		10.9	89.1	0	0		
Total %	0	0	0	0	0	0	38.4	3.2	0	41.6	4.7	0	13.8	0	18.4	4.4	35.6	0	0	40	

Data Collection Group

757.478.6761
LSmith@DataCollectionGroup.net

File Name : 9 Rte 215 & Vint Hill Pkwy PM
Site Code : 00000009
Start Date : 4/5/2011
Page No : 2

	From North					Rte 215 Vint Hill Rd From East					Vint Hill Pkwy From South					Rte 215 Vint Hill Rd From West					
Start Time	Right	Thru	Left	Peds	App. Total	Right	Thru	Left	Peds	App. Total	Right	Thru	Left	Peds	App. Total	Right	Thru	Left	Peds	App. Total	Int. Total
Peak Hour Analysis From 04:00 PM to 05:45 PM - Peak 1 of 1																					
Peak Hour for Entire Intersection Begins at 04:30 PM																					
04:30 PM	0	0	0	0	0	0	67	5	0	72	8	0	**25**	0	**33**	6	54	0	0	60	165
04:45 PM	0	0	0	0	0	0	58	3	0	61	5	0	16	0	21	**8**	66	0	0	74	156
05:00 PM	0	0	0	0	0	0	58	6	0	64	**9**	0	20	0	29	6	60	0	0	66	159
05:15 PM	0	0	0	0	0	0	**77**	**9**	0	**86**	5	0	22	0	27	7	**70**	0	0	**77**	**190**
Total Volume	0	0	0	0	0	0	260	23	0	283	27	0	83	0	110	27	250	0	0	277	670
% App. Total	0	0	0	0		0	91.9	8.1	0		24.5	0	75.5	0		9.7	90.3	0	0		
PHF	.000	.000	.000	.000	.000	.000	.844	.639	.000	.823	.750	.000	.830	.000	.833	.844	.893	.000	.000	.899	.882

Data Collection Group

757.478.6761
LSmith@DataCollectionGroup.net

File Name : 9 Rte 215 & Vint Hill Pkwy PM
Site Code : 00000009
Start Date : 4/5/2011
Page No : 3

Peak Hour Data

Peak Hour Begins at 04:30 PM

Unshifted

North

	Out	In	Total
	0	0	0

Right	Thru	Left	Peds
0	0	0	0

Rte 215 Vint Hill Rd	Out	In	Total
	277	283	560

Right	Thru	Left	Peds
0	260	23	0

Rte 215 Vint Hill Rd	Out	In	Total
	343	277	620

Right	Thru	Left	Peds
27	250	0	0

Vint Hill Pkwy	Out	In	Total
	50	110	160

Left	Thru	Right	Peds
83	0	27	0

Data Collection Group

757.478.6761
LSmith@DataCollectionGroup.net

File Name : 10 Rte 602 & Watson AM
Site Code : 00000010
Start Date : 4/6/2011
Page No : 1

Groups Printed- Unshifted

	Rte 602 From North					From East					Rte 602 From South					Watson From West					
Start Time	Right	Thru	Left	Peds	App. Total	Right	Thru	Left	Peds	App. Total	Right	Thru	Left	Peds	App. Total	Right	Thru	Left	Peds	App. Total	Int. Total
06:30 AM	0	5	0	0	5	0	0	0	0	0	0	35	5	0	40	0	0	1	0	1	46
06:45 AM	0	12	0	0	12	0	0	0	0	0	0	51	12	0	63	1	0	0	0	1	76
Total	0	17	0	0	17	0	0	0	0	0	0	86	17	0	103	1	0	1	0	2	122
07:00 AM	1	19	0	0	20	0	0	0	0	0	0	36	7	0	43	15	0	1	0	16	79
07:15 AM	2	19	0	0	21	0	0	0	0	0	0	56	10	0	66	8	0	0	0	8	95
07:30 AM	0	12	0	0	12	0	0	0	0	0	0	61	9	0	70	6	0	1	0	7	89
07:45 AM	0	12	0	0	12	0	0	0	0	0	0	42	6	0	48	8	0	0	0	8	68
Total	3	62	0	0	65	0	0	0	0	0	0	195	32	0	227	37	0	2	0	39	331
08:00 AM	1	18	0	0	19	0	0	0	0	0	0	38	7	0	45	11	0	2	0	13	77
08:15 AM	0	8	0	0	8	0	0	0	0	0	0	30	19	0	49	21	0	1	0	22	79
08:30 AM	1	22	0	0	23	0	0	0	0	0	0	35	13	0	48	4	0	1	0	5	76
08:45 AM	1	20	0	0	21	0	0	0	0	0	0	25	8	0	33	6	0	0	0	6	60
Total	3	68	0	0	71	0	0	0	0	0	0	128	47	0	175	42	0	4	0	46	292
Grand Total	6	147	0	0	153	0	0	0	0	0	0	409	96	0	505	80	0	7	0	87	745
Apprch %	3.9	96.1	0	0		0	0	0	0		0	81	19	0		92	0	8	0		
Total %	0.8	19.7	0	0	20.5	0	0	0	0	0	0	54.9	12.9	0	67.8	10.7	0	0.9	0	11.7	

Data Collection Group

757.478.6761
LSmith@DataCollectionGroup.net

File Name : 10 Rte 602 & Watson AM
Site Code : 00000010
Start Date : 4/6/2011
Page No : 2

	Rte 602 From North					From East					Rte 602 From South					Watson From West					
Start Time	Right	Thru	Left	Peds	App. Total	Right	Thru	Left	Peds	App. Total	Right	Thru	Left	Peds	App. Total	Right	Thru	Left	Peds	App. Total	Int. Total
Peak Hour Analysis From 06:30 AM to 08:45 AM - Peak 1 of 1																					
Peak Hour for Entire Intersection Begins at 06:45 AM																					
06:45 AM	0	12	0	0	12	0	0	0	0	0	0	51	**12**	0	63	1	0	0	0	1	76
07:00 AM	1	**19**	0	0	20	0	0	0	0	0	0	36	7	0	43	**15**	0	**1**	0	**16**	79
07:15 AM	**2**	19	0	0	**21**	0	0	0	0	0	0	56	10	0	66	8	0	0	0	8	**95**
07:30 AM	0	12	0	0	12	0	0	0	0	0	0	**61**	9	0	**70**	6	0	1	0	7	89
Total Volume	3	62	0	0	65	0	0	0	0	0	0	204	38	0	242	30	0	2	0	32	339
% App. Total	4.6	95.4	0	0		0	0	0	0		0	84.3	15.7	0		93.8	0	6.2	0		
PHF	.375	.816	.000	.000	.774	.000	.000	.000	.000	.000	.000	.836	.792	.000	.864	.500	.000	.500	.000	.500	.892

Data Collection Group

757.478.6761
LSmith@DataCollectionGroup.net

File Name : 10 Rte 602 & Watson AM
Site Code : 00000010
Start Date : 4/6/2011
Page No : 3

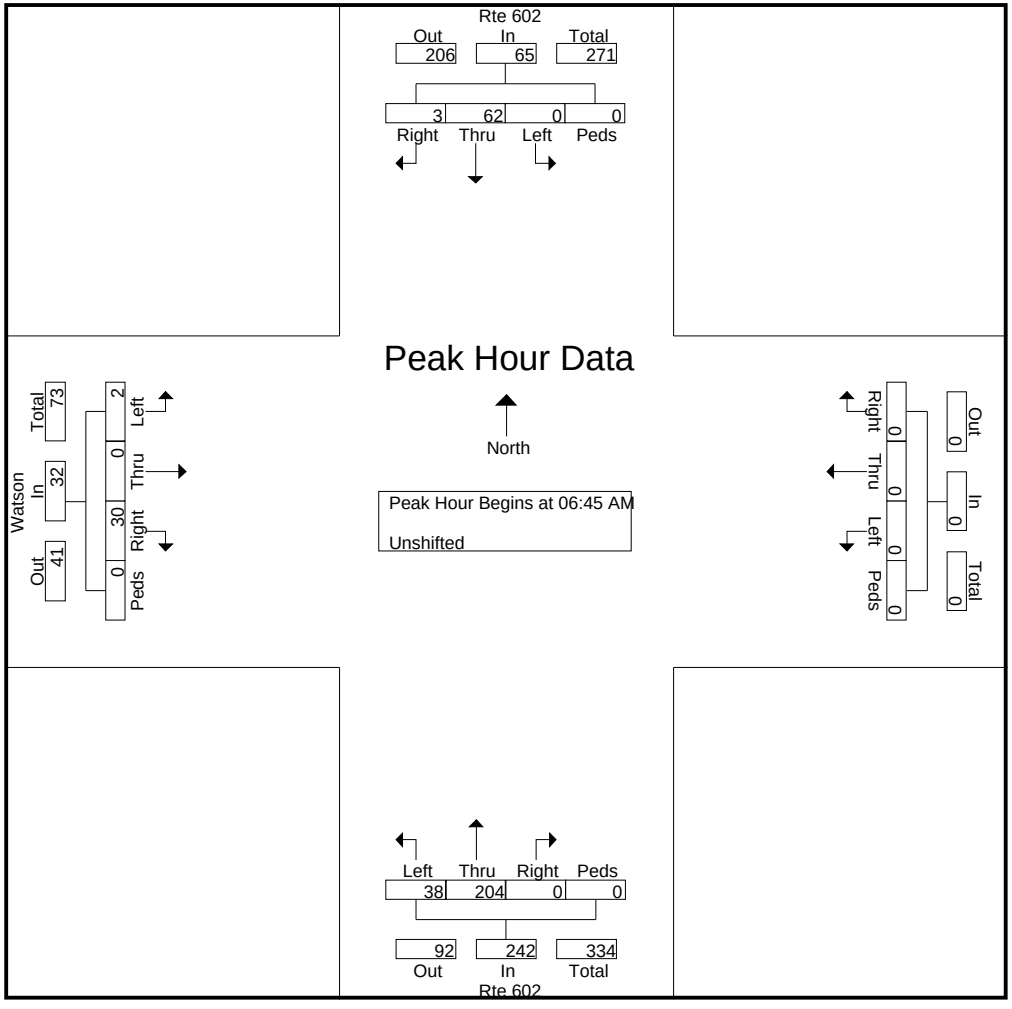

Data Collection Group

757.478.6761
LSmith@DataCollectionGroup.net

File Name : 10 Rte 602 & Watson PM
Site Code : 00000010
Start Date : 4/6/2011
Page No : 1

Groups Printed- Unshifted

	Rte 602 From North					From East					Rte 602 From South					Watson From West					
Start Time	Right	Thru	Left	Peds	App. Total	Right	Thru	Left	Peds	App. Total	Right	Thru	Left	Peds	App. Total	Right	Thru	Left	Peds	App. Total	Int. Total
04:00 PM	1	44	0	0	45	0	0	0	0	0	0	14	8	0	22	14	0	3	0	17	84
04:15 PM	1	54	0	0	55	0	0	0	0	0	0	20	8	0	28	4	0	1	0	5	88
04:30 PM	2	61	0	0	63	0	0	0	0	0	0	17	7	0	24	11	0	0	0	11	98
04:45 PM	0	72	0	0	72	0	0	0	0	0	0	21	8	0	29	11	0	4	0	15	116
Total	4	231	0	0	235	0	0	0	0	0	0	72	31	0	103	40	0	8	0	48	386
05:00 PM	1	55	0	0	56	0	0	0	0	0	0	15	11	0	26	19	0	5	0	24	106
05:15 PM	2	61	0	0	63	0	0	0	0	0	0	10	6	0	16	11	0	0	0	11	90
05:30 PM	0	80	0	0	80	0	0	0	0	0	0	11	3	0	14	10	0	2	0	12	106
05:45 PM	0	66	0	0	66	0	0	0	0	0	0	20	4	0	24	10	0	1	0	11	101
Total	3	262	0	0	265	0	0	0	0	0	0	56	24	0	80	50	0	8	0	58	403
Grand Total	7	493	0	0	500	0	0	0	0	0	0	128	55	0	183	90	0	16	0	106	789
Apprch %	1.4	98.6	0	0		0	0	0	0		0	69.9	30.1	0		84.9	0	15.1	0		
Total %	0.9	62.5	0	0	63.4	0	0	0	0	0	0	16.2	7	0	23.2	11.4	0	2	0	13.4	

Data Collection Group

757.478.6761
LSmith@DataCollectionGroup.net

File Name : 10 Rte 602 & Watson PM
Site Code : 00000010
Start Date : 4/6/2011
Page No : 2

	Rte 602 From North					From East					Rte 602 From South					Watson From West					
Start Time	Right	Thru	Left	Peds	App. Total	Right	Thru	Left	Peds	App. Total	Right	Thru	Left	Peds	App. Total	Right	Thru	Left	Peds	App. Total	Int. Total
Peak Hour Analysis From 04:00 PM to 05:45 PM - Peak 1 of 1																					
Peak Hour for Entire Intersection Begins at 04:45 PM																					
04:45 PM	0	72	0	0	72	0	0	0	0	0	0	**21**	8	0	**29**	11	0	4	0	15	**116**
05:00 PM	1	55	0	0	56	0	0	0	0	0	0	15	**11**	0	26	**19**	0	**5**	0	**24**	106
05:15 PM	**2**	61	0	0	63	0	0	0	0	0	0	10	6	0	16	11	0	0	0	11	90
05:30 PM	0	**80**	0	0	**80**	0	0	0	0	0	0	11	3	0	14	10	0	2	0	12	106
Total Volume	3	268	0	0	271	0	0	0	0	0	0	57	28	0	85	51	0	11	0	62	418
% App. Total	1.1	98.9	0	0		0	0	0	0		0	67.1	32.9	0		82.3	0	17.7	0		
PHF	.375	.838	.000	.000	.847	.000	.000	.000	.000	.000	.000	.679	.636	.000	.733	.671	.000	.550	.000	.646	.901

Data Collection Group

757.478.6761
LSmith@DataCollectionGroup.net
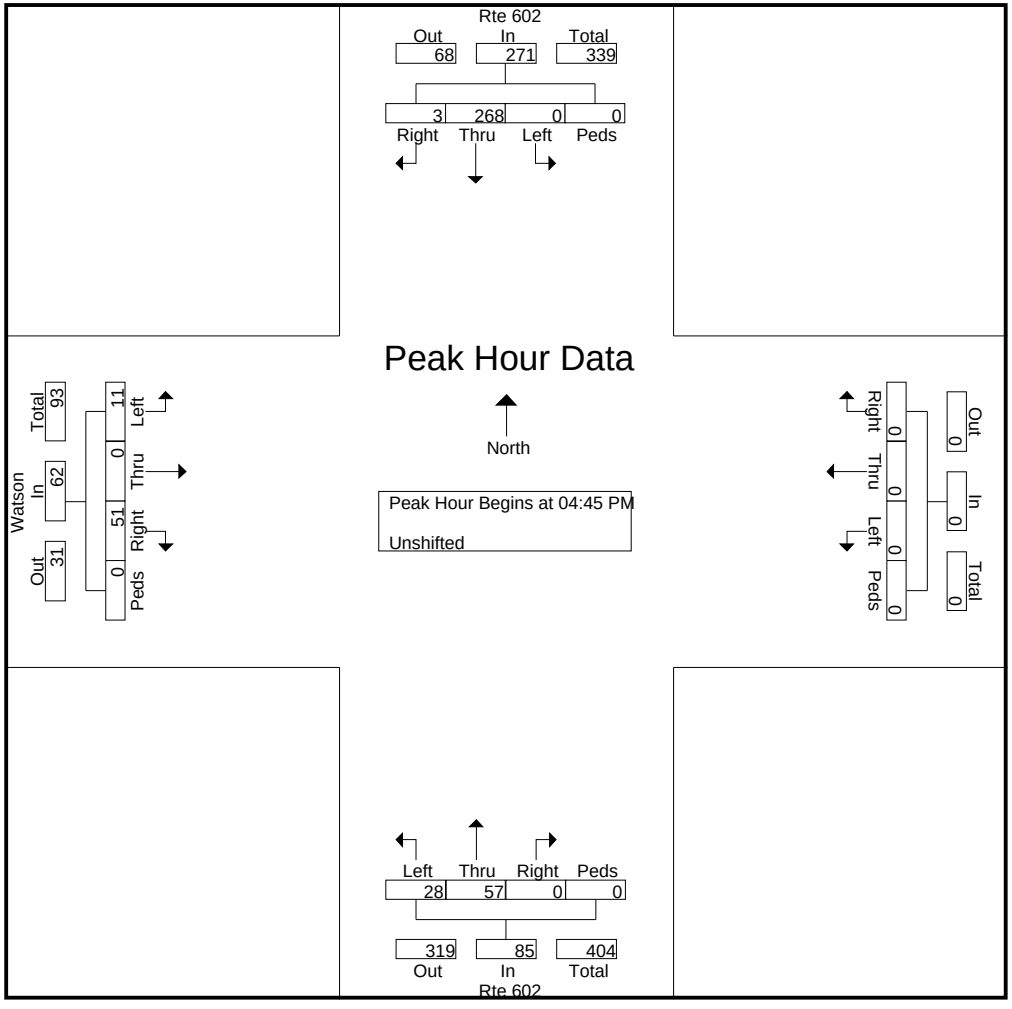
File Name : 10 Rte 602 & Watson PM
Site Code : 00000010
Start Date : 4/6/2011
Page No : 3